Original Instructions
1028680 - REV. 08

EMERSON

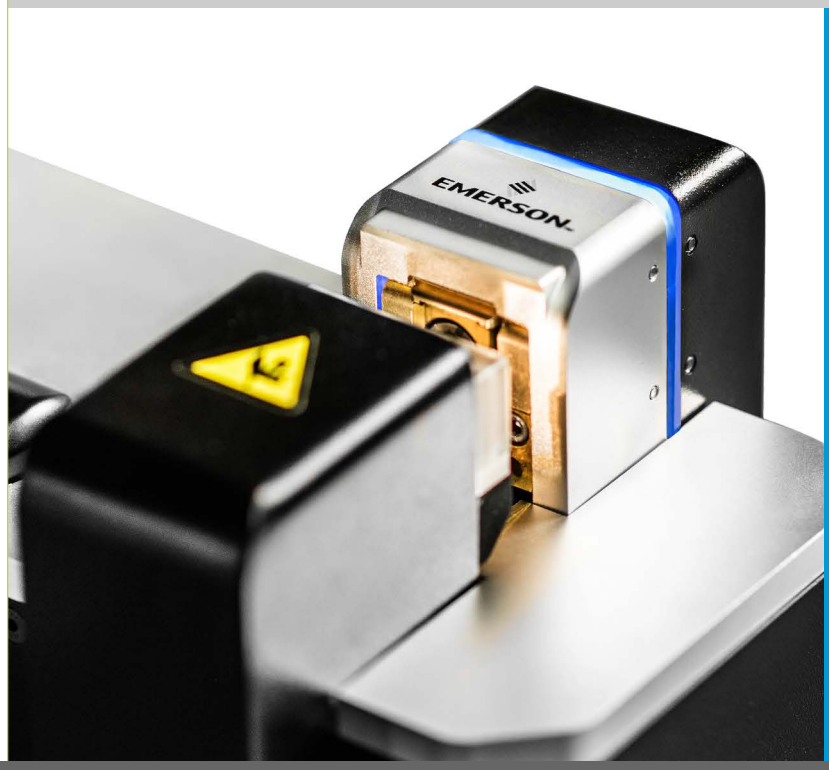

GMX-W1

Ultrasonic Wire Splicer System

Instruction Manual

Branson Ultrasonics Corp.
120 Park Ridge Road
Brookfield, CT 06804 USA
203-796-0400
http://www.bransonultrasonics.com

BRANSON

Manual Change Information

At Branson, we strive to maintain our position as the leader in ultrasonics metal welding, plastics joining, ultrasonic cleaning, and related technologies by continually improving our circuits and components in our equipment. These improvements are incorporated as soon as they are developed and thoroughly tested.

Information concerning any improvements will be added to the appropriate technical documentation at its next revision and printing. Therefore, when requesting service assistance for specific units, note the revision information found on the cover of this document, and refer to the printing date which appears on this page.

Copyright and Trademark Notice

Copyright © 2026 Branson Ultrasonics Corp. All rights reserved. Contents of this publication may not be reproduced in any form without the written permission of Branson Ultrasonics Corp.

WD-40 is a registered trademark of WD-40 Manufacturing Company Corporation.

Windows is a registered trademark of Microsoft Corporation.

Other trademarks and service marks mentioned herein are held by their respective owners.

Foreword

Congratulations on your choice of a Branson system!

The GMX-W1 system is a process equipment for the joining of metal parts using ultrasonic energy. It is the newest generation of product using this sophisticated technology for a variety of customer applications. This Instruction Manual is part of the documentation set for this system, and should be kept with the equipment.

Thank you for choosing Branson!

Introduction

This manual is arranged into several structured chapters which will help you find the information you may need to know to safely handle, install, set up, program, operate, and/or maintain this product. Please refer to the Table of Contents and/or the Index of this manual to find the information you may be looking for. In the event you require additional assistance or information, please contact our Product Support department (see 1.3 Contact Us for information on how to contact them) or your local Branson representative.

[This page intentionally left blank]

Table of Contents

Chapter 1: Safety and Support
1.1 Safety Requirements and Warnings . . . 12
1.2 General Precautions . . . 14
1.3 Contact Us . . . 16
1.4 Warranty . . . 17
1.5 Cybersecurity Vulnerability Reporting . . . 18

Chapter 2: Introduction
2.1 Models Covered . . . 20
2.2 Overview . . . 21
2.3 Compatibility With Branson Products . . . 31
2.4 Ultrasonic Theory . . . 32
2.5 Terminology . . . 39

Chapter 3: Shipping and Handling
3.1 Shipping and Handling . . . 44
3.2 Receiving . . . 45
3.3 Unpacking the GMX-W1 System . . . 46
3.4 Returning Equipment . . . 47

Chapter 4: Technical Specifications
4.1 Technical Specifications . . . 52
4.2 Physical Description . . . 53

Chapter 5: Installation and Setup
5.1 About Installation . . . 56
5.2 Handling and Unpacking . . . 57
5.3 Installation Requirements . . . 58
5.4 Installation Steps . . . 62
5.5 Safety Devices . . . 67
5.6 Still Need Help? . . . 68

Chapter 6: Operation
6.1 Operation . . . 70
6.2 Log In . . . 71
6.3 Main Menu . . . 72
6.4 Create Menu . . . 75
6.5 Setup & Teach Mode Menu . . . 78
6.6 Operate Menu . . . 82
6.7 View Data Menu . . . 84
6.8 Maintenance Menu . . . 87
6.9 Settings Menu . . . 91
6.10 Test the Welding System . . . 100
6.11 Establishing Weld Parameters . . . 102
6.12 How to build the communication with laptop . . . 109

Chapter 7: Maintenance
7.1 Controller Maintenance . . . 116
7.2 Actuator Maintenance . . . 118

7.3 Tools 157
7.4 Troubleshooting 158
7.5 Parts List 162

Appendix A: Electric Interconnect Diagram
A.1 Electric Interconnect Diagram 166

Appendix B: Pneumatic Interconnect Diagram
B.1 Pneumatic Interconnect Diagram 170

List of Tables

Chapter 1: Safety and Support
Table 1.1 Safety-related Labels found on the GMX-W1 system 13

Chapter 2: Introduction
Table 2.1 Models Covered in this Manual 20
Table 2.2 GMX-W1 System 21
Table 2.3 GMX-W1 Controller 23
Table 2.4 Actuator - External Structure 24
Table 2.5 Actuator - Internal Structure 25
Table 2.6 Actuator - Internal Structure 26
Table 2.7 Stack Assembly Structure 27
Table 2.8 Anvil Assembly Structure 28
Table 2.9 Cutter Assembly (Optional) 29
Table 2.10 Tooling unit (optional) 30
Table 2.11 Controller compatibility with Branson Metal Welding Converters 31
Table 2.12 Calculating Power 33
Table 2.13 Calculating Energy 33

Chapter 3: Shipping and Handling
Table 3.1 Shipping Specifications 44
Table 3.2 Inspect the system 45
Table 3.3 Unpacking the GMX-W1 system 46

Chapter 4: Technical Specifications
Table 4.1 Environmental Specifications 52
Table 4.2 Electrical Input Operating Voltages 52
Table 4.3 Input Current Specifications 52
Table 4.4 Continuous Duty Max. Power 52
Table 4.5 Dimensions and Weights of GMX-W1 Controller 53
Table 4.6 Dimensions and Weights of GMX-W1 Actuator 53

Chapter 5: Installation and Setup
Table 5.1 Environmental Specifications 58
Table 5.2 Electrical Input Operating Voltages 61
Table 5.3 Input Current Specifications 61
Table 5.4 Continuous Duty Max. Power 61

Chapter 6: Operation
Table 6.1 Shortcut Keys 72
Table 6.2 Evaluation of Splice 104
Table 6.3 Disable FBWF (Apply to Windows 7 systems) 109
Table 6.4 Disable UWF (Apply to Windows 10 systems) 110
Table 6.5 Set IP address 110
Table 6.6 Firewall settings 111
Table 6.7 Set IP address 111
Table 6.8 Local network testing 112
Table 6.9 HMI software configuration 113
Table 6.10 HMI software configuration 114

Chapter 7: Maintenance

Table 7.1 Gather Tip Maintenance 118
Table 7.2 Anvil Tip Maintenance 123
Table 7.3 Anvil Tip Guide Maintenance. 129
Table 7.4 Horn Maintenance 136
Table 7.5 Cutter Replacement. 145
Table 7.6 Anvil Tip Position Adjustment 150
Table 7.7 Checking the gap 152
Table 7.8 Adjusting the gap 153
Table 7.9 Screws and Tightening Torque 156
Table 7.10 Toolkit (EDP 1014626). 157
Table 7.11 Torque Wrenches (EDP 1020468) 157
Table 7.12 Set Up Tools (Optional) 157
Table 7.13 Functional Alarms Troubleshooting 159
Table 7.14 Spare Parts 162

Appendix A: Electric Interconnect Diagram

Appendix B: Pneumatic Interconnect Diagram

List of Figures

Chapter 1: Safety and Support

Chapter 2: Introduction
Figure 2.1 GMX-W1 System 21
Figure 2.2 Controller - Front View 22
Figure 2.3 Controller - Rear View. 23
Figure 2.4 Actuator - External Structure. 24
Figure 2.5 Actuator - Internal Structure 25
Figure 2.6 Actuator - Internal Structure 26
Figure 2.7 Stack Assembly Structure 27
Figure 2.8 Anvil Assembly Structure 28
Figure 2.9 Cutter Assembly (Optional) 29
Figure 2.10 How does ultrasonic welding work? 32
Figure 2.11 Weld Power Graph for Clean and Dirty Components, and when Part is Missing. 34
Figure 2.12 Pressure Variable with Increased Power 35
Figure 2.13 Pressure Variable with Increased Time 35
Figure 2.14 Scrubbing Action on Weld Interface 36
Figure 2.15 Amplitude’s Influence on Weld Power and Time 36
Figure 2.16 Amplitude Stepping Profile 37
Figure 2.17 Harmonic Resonance on Ultrasonic Tooling 37

Chapter 3: Shipping and Handling

Chapter 4: Technical Specifications

Chapter 5: Installation and Setup
Figure 5.1 Controller Dimensional Drawings 59
Figure 5.2 Actuator Dimensional Drawing. 60
Figure 5.3 Connecting the Actuator (Fixed Connect Block) 62
Figure 5.4 Connecting the Controller 64
Figure 5.5 Mounting the E-Stop Switch 65
Figure 5.6 Remote Box. 66
Figure 5.7 Remote Box Dimensional Drawing 66
Figure 5.8 Emergency Stop. 67

Chapter 6: Operation
Figure 6.1 Log In. 71
Figure 6.2 Entering Credentials 71
Figure 6.3 Main Menu. 72
Figure 6.4 Menu Button 73
Figure 6.5 Submenu 73
Figure 6.6 Language Button 73
Figure 6.7 Language Selection 73
Figure 6.8 Help Button 74
Figure 6.9 Help Description. 74
Figure 6.10 User Button 74
Figure 6.11 Switch User and Shut Down 74
Figure 6.12 Create Menu 75
Figure 6.13 Wire Builder 75

Figure 6.14 Weld Settings . . . 76
Figure 6.15 Create Sequence. . . . 77
Figure 6.16 Create Harness. . . . 77
Figure 6.17 Setup & Teach Mode Menu . . . 78
Figure 6.18 Setup Splice . . . 78
Figure 6.19 Teach Mode . . . 79
Figure 6.20 Standard Teach Mode . . . 79
Figure 6.21 Auto Teach Mode . . . 80
Figure 6.22 Sigma Markers . . . 81
Figure 6.23 Sigma Teach Mode . . . 81
Figure 6.24 Operate Splice . . . 82
Figure 6.25 Operate Sequence. . . . 83
Figure 6.26 Operate Harness. . . . 83
Figure 6.27 View Data . . . 84
Figure 6.28 Weld Result History . . . 84
Figure 6.29 Statistical Trend . . . 85
Figure 6.30 Alarm/Error Log . . . 85
Figure 6.31 Library. . . . 86
Figure 6.32 Version Information . . . 86
Figure 6.33 Maintenance Menu . . . 87
Figure 6.34 Calibration . . . 87
Figure 6.35 Tooling Change. . . . 88
Figure 6.36 Advanced Maintenance . . . 88
Figure 6.37 Maintenance Counter. . . . 89
Figure 6.38 Maintenance Log. . . . 89
Figure 6.39 User Manual . . . 90
Figure 6.40 Permission Setting Screen . . . 91
Figure 6.41 Permission Prompt Message . . . 92
Figure 6.42 Key Switch Restricted Screen . . . 92
Figure 6.43 Configuration . . . 93
Figure 6.44 Formula . . . 94
Figure 6.45 Auto Quality. . . . 95
Figure 6.46 Dimension Correct . . . 96
Figure 6.47 Dimension Correct Options. . . . 96
Figure 6.48 Data Communication . . . 97
Figure 6.49 Teach Mode . . . 98
Figure 6.50 Operator Library . . . 99
Figure 6.51 Proper Wire Insertion . . . 102
Figure 6.52 Quality Monitoring. . . . 107
Figure 6.53 Percent Compaction vs. Tensile Strength . . . 108

Chapter 7: Maintenance

Figure 7.1 Correct position of anvil tip . . . 149
Figure 7.2 Screws and Tightening Torque . . . 156
Figure 7.3 Status display under Fundamental Alarms . . . 158
Figure 7.4 Status display under Functional Alarms . . . 159

Appendix A: Electric Interconnect Diagram

Figure A.1 Electrical Interconnect Diagram - 01 . . . 166
Figure A.2 Electrical Interconnect Diagram - 02 . . . 167

Appendix B: Pneumatic Interconnect Diagram

Figure B.1 Pneumatic Interconnect Diagram . . . 170

Chapter 1: Safety and Support

1.1 Safety Requirements and Warnings 12
1.2 General Precautions 14
1.3 Contact Us 16
1.4 Warranty. 17
1.5 Cybersecurity Vulnerability Reporting 18

1.1 Safety Requirements and Warnings

This chapter contains an explanation of the different Safety Notice symbols and icons found both in this manual and on the product itself and provides additional safety information for ultrasonic welding. This chapter also describes how to contact Branson for assistance.

1.1.1 Symbols Found in this Manual

These symbols used throughout this manual warrant special attention:

DANGER	**Indicates an immediate danger**
	If these risks are not avoided, death or severe injury will be the result.

WARNING	Indicates a possible danger
	If these risks are not avoided, death or severe injury might result.

CAUTION	**Indicates a possible danger**
	If these risks are not avoided, slight or minor injury might result.

NOTICE	**Indicates a possible damaging situation**
	If this situation is not avoided, the system or something in its vicinity might get damaged. Application types and other important or useful information are emphasized.

NOTICE	
	Notice is used to address practices not related to personal injury. It contains important information. It might also alert the user to unsafe practices or conditions that can damage equipment if not corrected.

1.1.2 Symbols Found on the Product

The GMX-W1 system has several safety-related labels on it to indicate the presence of hazardous inside the unit.

Table 1.1 Safety-related Labels found on the GMX-W1 system

Label	Description
	Electrical Shock Hazard High voltage inside. Disconnect power before servicing.
	Crush Hazard Moving parts present. Can result in serious injury to hands or fingers. Keep hands away from moving horn.

1.2 General Precautions

Take the following precautions before servicing the GMX-W1 system:

- To prevent the possibility of an electrical shock, always connect the controller into a grounded power source
- To prevent the possibility of an electrical shock, ground the controller by securing the yellow/green grounded conductor to the ground terminal
- Power supplies produce high voltage. Before working on the controller assembly, do the following:

  Turn off the controller

  Disconnect main power

  Allow at least 5 minutes for capacitors to discharge
- High voltage is present in the controller. Do not operate with the cover removed
- High line voltages exist in the controller assembly. Common points are tied to circuit reference, not chassis ground. Therefore, use only non-grounded, battery-powered multimeters when testing the controller assembly. Using other types of test equipment can present a shock hazard
- Keep hands from under the horn. Down force (pressure) and ultrasonic vibrations can cause injury
- Safety guard protects the tooling area. Visually inspect the integrity of the safety guard working before operating the system
- Do not cycle the welding system if either the RF cable or converter is disconnected
- When using larger horns, avoid situations where fingers could be pinched between the horn and the fixture
- Ensure the controller installation is performed by qualified personnel and in accordance with local standards and regulations

CAUTION	
	Sound level and frequency of the noise emitted during the ultrasonic assembly process may depend upon a. type of application, b. size, shape and composition of the material being assembled, c. shape and material of the holding fixture, d. welder setup parameters and e. tool design. Some parts vibrate at an audible frequency during the process. Some or all of these factors may result in an uncomfortable noise being emitted during the process. 79.4 dB(A) is taken from measurement of technically comparable machinery which is representative of the machinery to be produced. In such cases operators may need to be provided with personal protective equipment. See 29 CFR (Code of Federal Regulations) 1910.95 Occupational Noise Exposure.

1.2.1 Intended Use of the System

NOTICE	
	This product is designed for copper wire splicing applications. Although other materials may be possible, customers are responsible for testing and qualifying additional materials.

The GMX-W1 system and components are designed to be used as part of an ultrasonic welding system. These are designed for a wide variety of welding or processing applications.

If the equipment is used in a manner not specified by Branson, the protection provided by the equipment may be impaired.

Branson Ultrasonics Corp. designs and manufactures machines giving the first priority to safety precautions, to allow customers to use the machines safely and effectively. Only trained operators should run and service the equipment. Untrained operators can misuse the equipment or ignore safety instructions that can result in personal injury or equipment damage. It is most essential that all operators and service personnel pay attention to safety instructions when operating and servicing the equipment.

1.2.2 Setting up the Workplace

Measures for setting up a workplace for safe operation of the ultrasonic welder are outlined in Chapter 5: Installation and Setup.

1.2.3 Regulatory Compliance

The Branson product GMX-W1 is designed to be in compliance with the following U.S. & CANADA regulatory and agency guidelines and standards:

- **UL 61010-1:2012 R11.18**

  Safety Requirements for Electrical Equipment for Measurement, Control, and Laboratory Use - Part 1: General Requirements
- **CAN/CSA-C22.2 NO.61010-1-12+GI1+GI2 (R2017)+A1**

  Safety Requirements for Electrical Equipment For Measurement, Control, And Laboratory Use - Part 1: General Requirements
- **FCC Part 18:2019**

  Industrial, Scientific and Medical Equipment Test Specification

The Branson product GMX-W1 is designed to be in compliance with the following listed European standards as specified by the Directives issued by the European Parliament and The Council of the European Union:

- **EN 60204-1:2018**

  Safety of machinery - Electrical equipment of machines - Part 1: General requirements
- **EN ISO 12100:2010**

  Safety of machinery. General principles for design. Risk assessment and risk reduction
- **EN 55011:2016+A1**

  Industrial, scientific and medical equipment - Radio-frequency disturbance characteristics - Limits and methods of measurement
- **EN 61000-6-2:2005**

  Electromagnetic compatibility (EMC) - Part 6-2: Generic standards - Immunity for industrial environments
- **IEC 61010-1:2010+A**

  Safety requirements for electrical equipment for measurement, control, and laboratory use - Part 1: General requirements

The Branson product GMX-W1 is designed to be in compliance with the following China regulatory and agency guidelines and standards:

- **GB 4824-2019**

  Industrial, scientific and medical (ISM) radio-frequency equipment. Disturbance characteristics. Limits and methods of measurement.
- **GB/T 5226.1-2019**

  Electrical safety of machinery - Electrical equipment of machines - Part 1: General requirements
- **GB 12265.3-1997**

  Safety of machinery - Minimum gaps to avoid crushing of parts of the human body
- **GB 16754-2008**

  Safety of machinery - Emergency stop - Principles for design
- **GB 18209.1-2010**

  Electrical safety of machinery - Indication, marking and actuation - Part 1: Requirements for visual, acoustic and tactile signals
- **GB 18209.2-2010**

  Electrical safety of machinery - Indication, marking and actuation - Part 2: Requirements for marking
- **GB 18209.3-2010**

  Electrical safety of machinery - Indication, marking and actuation - Part 3: Requirements for the location and operation of actuators

1.3 Contact Us

Our dedicated experts are here to assist you with any questions or concerns you may have, ensuring you get the help you need.

Visit https://www.emerson.com/en/corporate/contact-us to find the technical support information, documentation, and software updates you need for your Emerson products and systems.

1.4 Warranty

For warranty information please reference the warranty section of Terms and Conditions found at: https://www.branson.emerson.com/en/branson-terms-conditions.

1.5 Cybersecurity Vulnerability Reporting

In accordance with the EU Cyber Resilience Act, we provide a Single Point of Contact for reporting cybersecurity vulnerabilities or security incidents related to this product. If you discover a potential vulnerability, please report it to us using the dedicated contact channel (Single point of Contact): Branson.PSIRT@emerson.com or via the reporting form available at https://emerson.com/reportvulnerability.

Chapter 2: Introduction

2.1 Models Covered 20
2.2 Overview. 21
2.3 Compatibility With Branson Products. 31
2.4 Ultrasonic Theory 32
2.5 Terminology 39

2.1 Models Covered

This manual covers all models of the GMX-W1 system.

Table 2.1 Models Covered in this Manual

Features	Description
Actuator & Main Harness & Fixed Switch	Actuator for screwed harness
	Main Harness - 3 m Screwed
	Main Harness - 9 m Screwed
	Main Harness - 15 m Screwed
	Fixed Switch
Actuator & Main Harness & Remote Switch	Actuator for quick connect harness
	Main Harness - 3 m quick connecting
	Main Harness - 9 m quick connecting
	Main Harness - 15 m quick connecting
	Fixed Switch (or Remote Switch)
E-Stop	Remote E-Stop
Monitor	Touchscreen Display 22''
VGA Cable	VGA Cable
Foot Pedal Switch	Foot Pedal Switch
Tooling	Tooling Package - 1/2''
	Tooling Package - 3/8''
	Tooling Package - Fine 3/8''
Maintenance Tools	Tool Kit
	Torque Wrenches
Cutter	Cutter Kit
Power Supply	Power Supply w/ EU line cord
	Power Supply w/ UL line cord

NOTICE	
	For detailed information, contact Branson service.

2.2 Overview

2.2.1 General View of the GMX-W1 System

Figure 2.1 GMX-W1 System

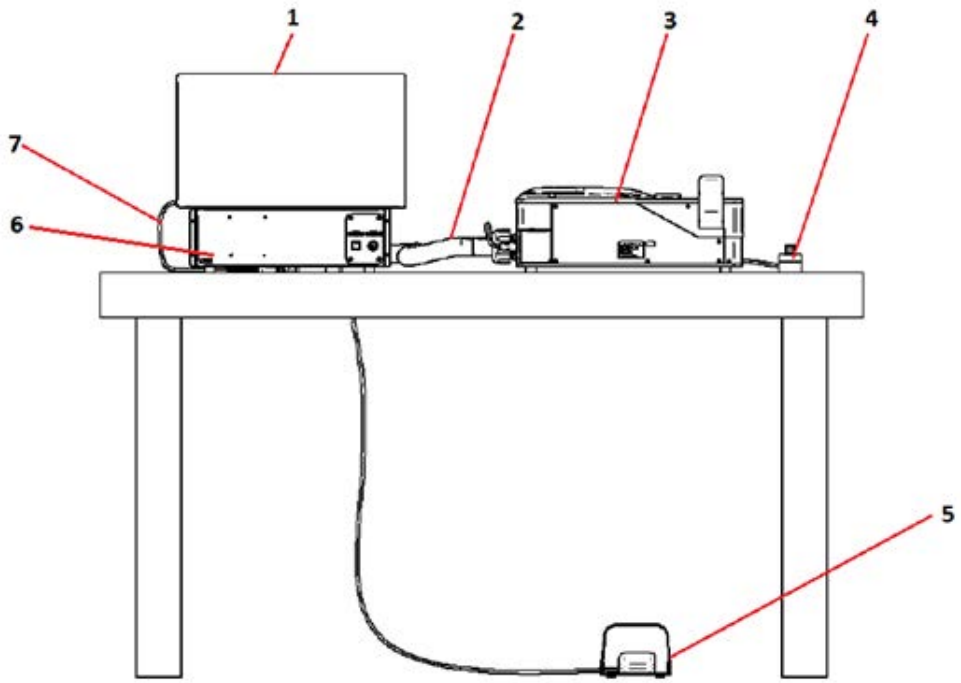

Table 2.2 GMX-W1 System

Item	Description	EDP
1	Monitor	1010766
2	Main Harness (3 m)	1026856
	Main Harness (9 m)	1026857
	Main Harness (15 m)	1026858
3	Actuator	1026584
4	E-Stop Switch	1007764
5	Foot Switch	1007765
6	Controller	1028318
7	VGA Cable*	BU-1014846

*The recommended length of VGA cable is shorter than 3 meters to guarantee the display effect.

2.2.2 Controller

2.2.2.1 Front View

Figure 2.2 Controller - Front View

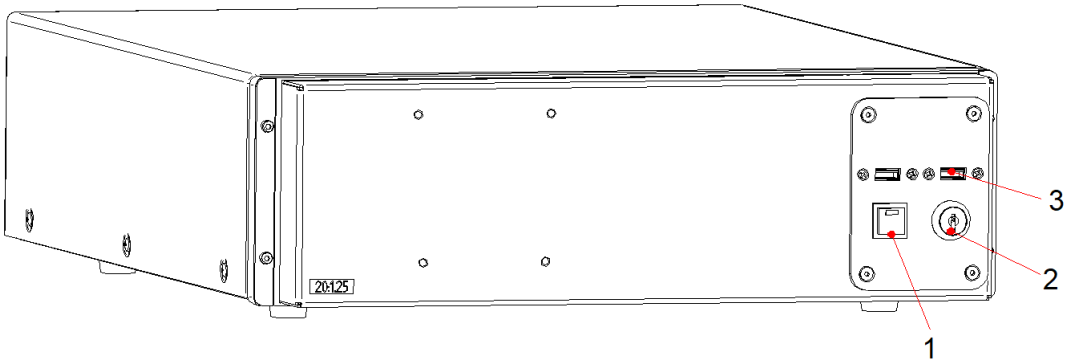

Item	Description
1	Power Switch
2	Key Switch
3	USB Connector

2.2.2.2 Rear View

Figure 2.3 Controller - Rear View

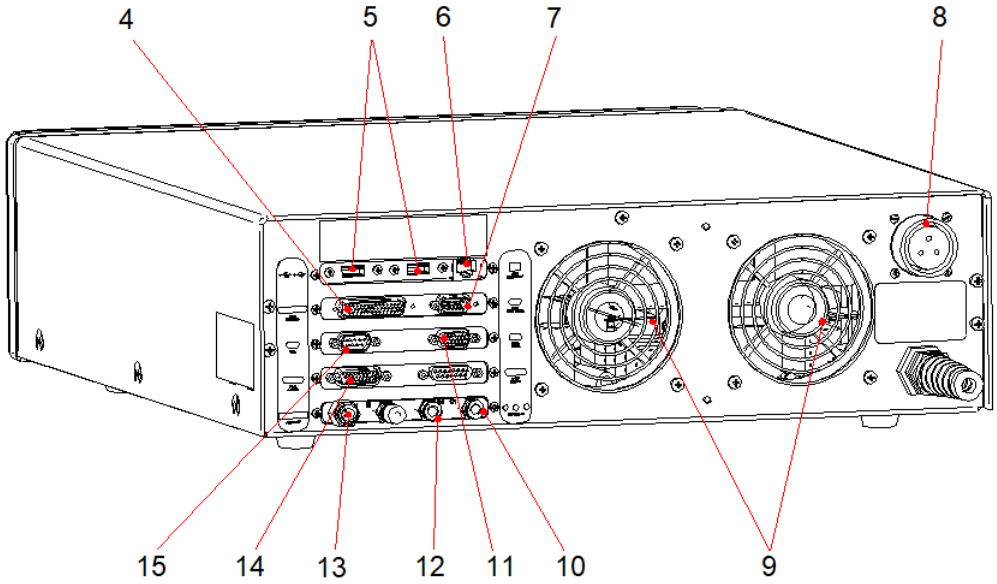

Table 2.3 GMX-W1 Controller

Item	Description	EDP	Item	Description	EDP
4	Control Cable Connector	102-242-1270R	10	Air Tubes Fitting C1	047-200-883
5	USB Connector	100-241-422	11	VGA Connector For Monitor	100-241-426
6	Ethernet Connector	200-029-1052	12	Air Tubes Fitting C2	047-200-883
7	Foot Pedal Connector	102-242-1270R	13	Air Source Input IN	1020186
8	RF Cable Socket	100-246-949R	14	Data Cable Connector	1015242
9	Cooling Fan	100-126-015R	15	Serial Port RS232	100-241-425

2.2.3 Actuator

2.2.3.1 External Structure

Figure 2.4 Actuator - External Structure

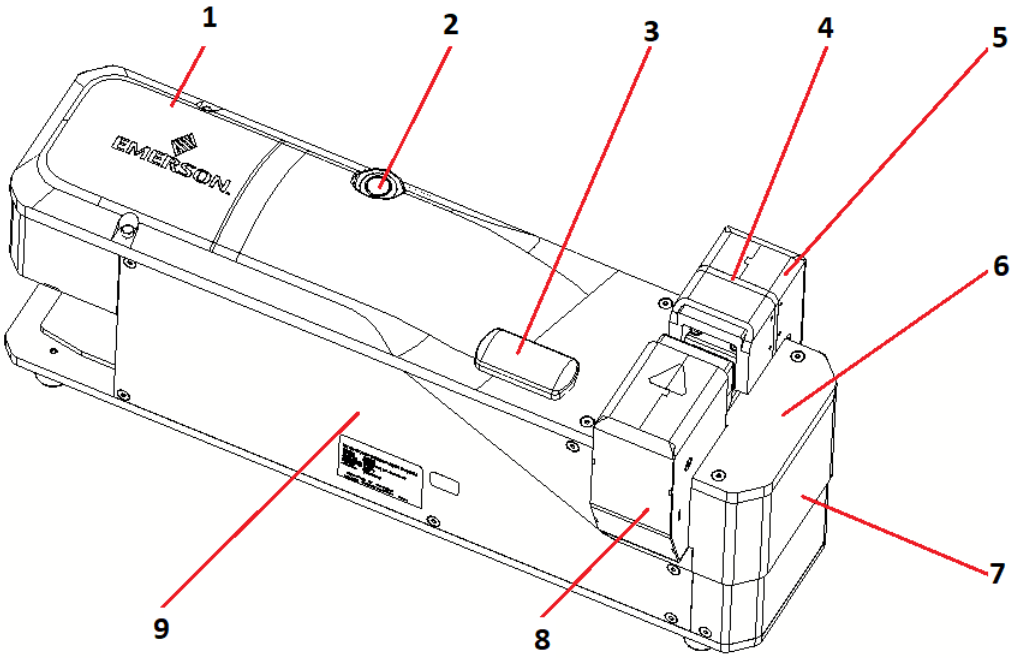

Table 2.4 Actuator - External Structure

Item	Description	EDP
1	Large Top Cover	1007623
2	Reset Switch	1008101
3	Start Switch	1028475
4	Status Display Window	1007926
5	Anvil Cover	BU-1028499
6	Small Top Cover	1026584
7	Cutter Enclosure	1026497
8	Gather Cover	1028474
9	Lateral Enclosure	1026874

2.2.3.2 Internal Structure

Figure 2.5 Actuator - Internal Structure

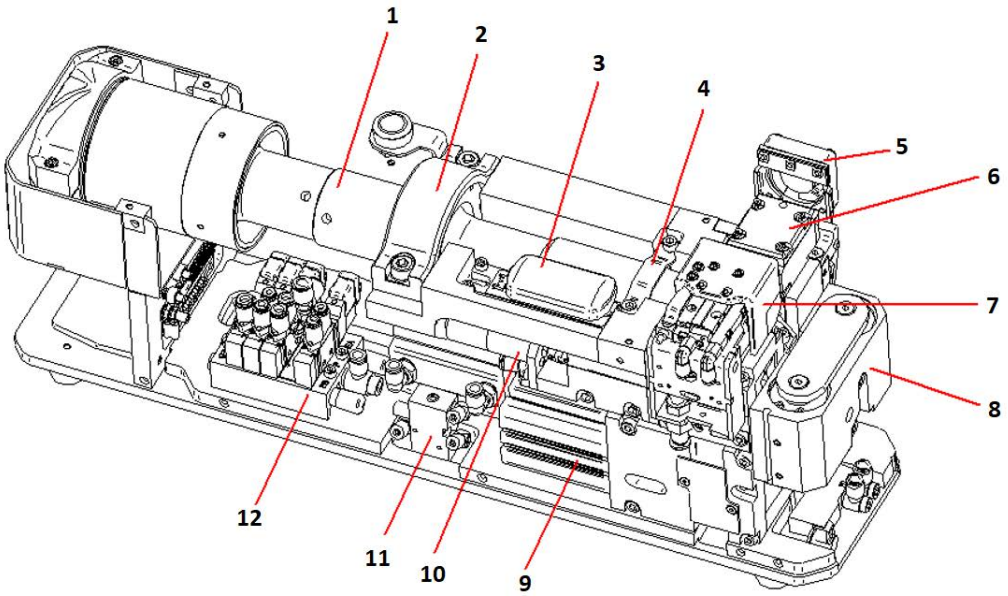

Table 2.5 Actuator - Internal Structure

Item	Description	EDP	Item	Description	EDP
1	Stack Assembly	1026520	7	Safety Guard Cover	BU-1042441
2	Booster Clamp	1028484	8	Cutter Assembly	1028015
3	Hand Start Switch Board	1026485	9	Gather Cylinder	1005799
4	Horn Nodal Clamp	1026502	10	Width Motor & Encoder	1005765
5	Anvil Assembly	1028493	11	Anvil Cylinder Valve	1012832
6	RGB LED Board	1008391	12	Manifold	1014606

Figure 2.6 Actuator - Internal Structure

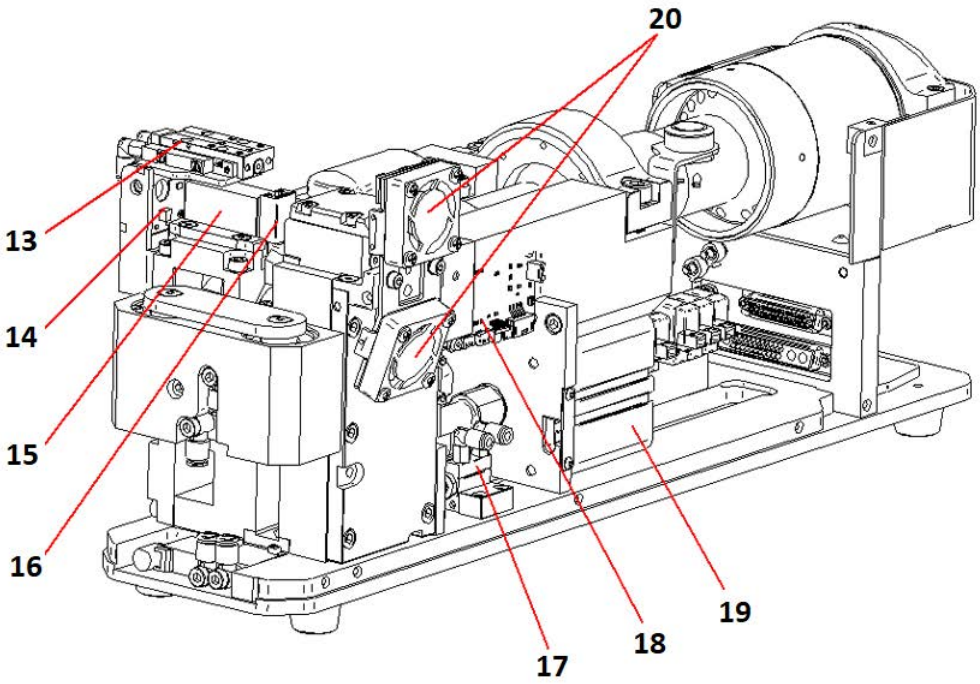

Table 2.6 Actuator - Internal Structure

Item	Description	EDP	Item	Description	EDP
13	Safety Guard Cylinder	1009948	17	Crash Down Cylinder	1005785
14	LED Board	1008391	18	Actuator Board	102-242-1273
15	Gather Holder	1006018	19	Anvil Cylinder	1005800
16	Gather Tip*	1005757	20	Tooling Cooling Fans	1007923

*See section 2.2.4 3/8” Tooling Option for more information.

2.2.3.3 Stack Assembly Structure

Figure 2.7 Stack Assembly Structure

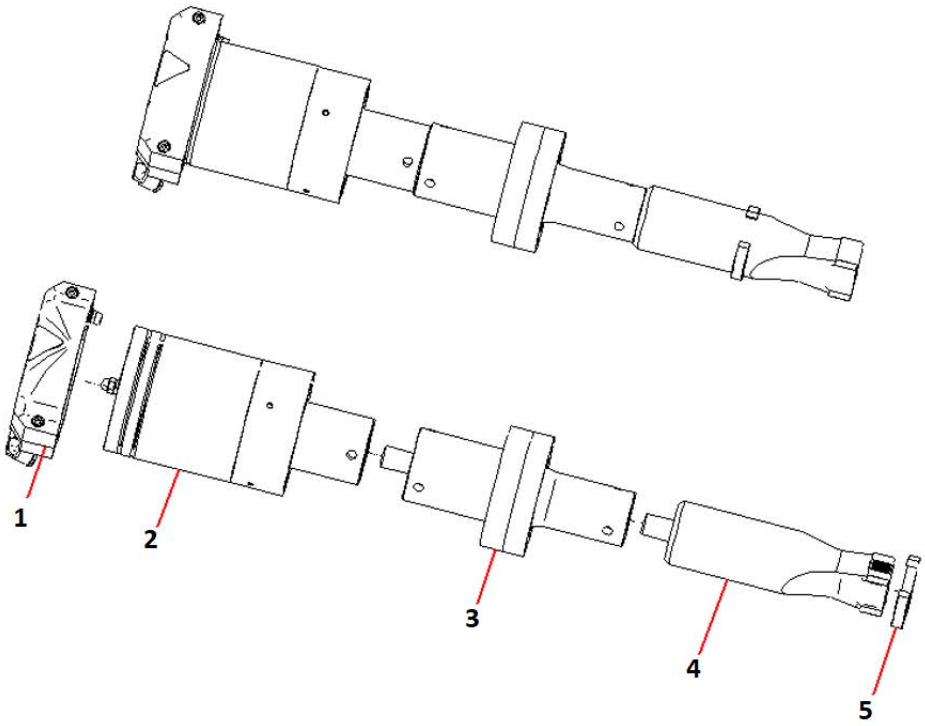

Table 2.7 Stack Assembly Structure

Item	Description	EDP
1	RF Cover	1009593
2	Converter	101-135-059R
3	Solid Mount Booster	1005840
4	Horn*	1026519
5	Horn Nodal Ring	BU-1042441

*See section 2.2.4 3/8" Tooling Option for more information.

CAUTION	
⚠	Do not disassemble the solid mount booster.

2.2.3.4 Anvil Assembly Structure

Figure 2.8 Anvil Assembly Structure

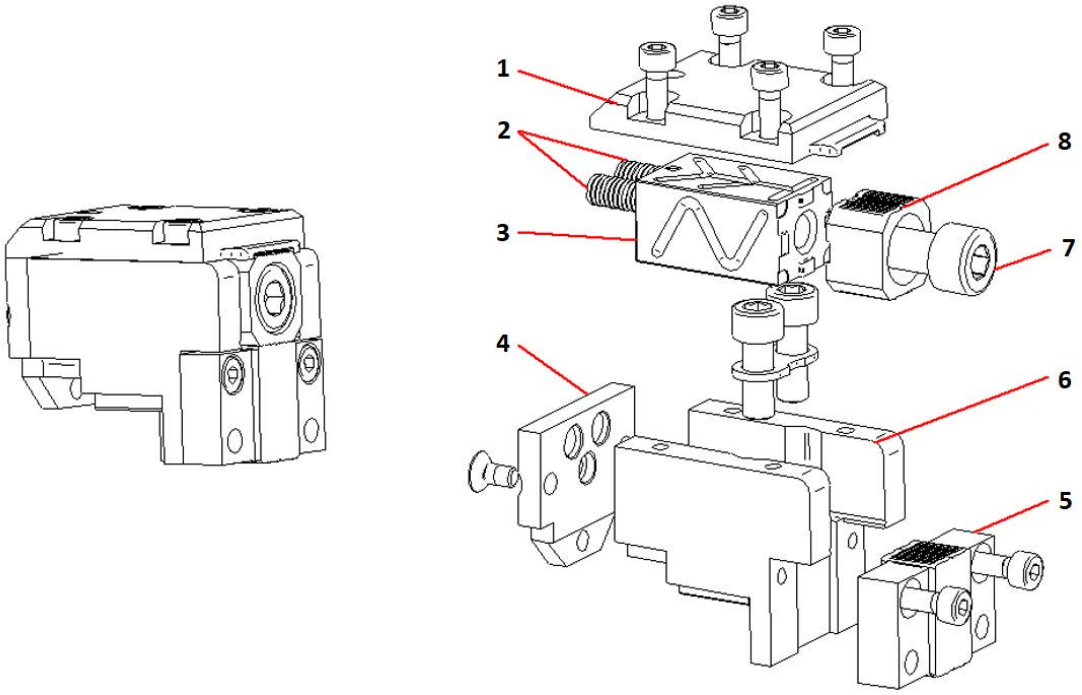

Table 2.8 Anvil Assembly Structure

Item	Description	EDP
1	Anvil Top Plate	1028456
2	Spring	1016519
3	Anvil Arm Guide	1028455
4	Damper	1028457
5	Anvil Tip Guide*	1005759
6	Anvil Arm Guide	1028453
7	Screw	1014497
8	Anvil Tip*	1005751

*See section 2.2.4 3/8” Tooling Option for more information.

2.2.3.5 Cutter Assembly (Optional)

Figure 2.9 Cutter Assembly (Optional)

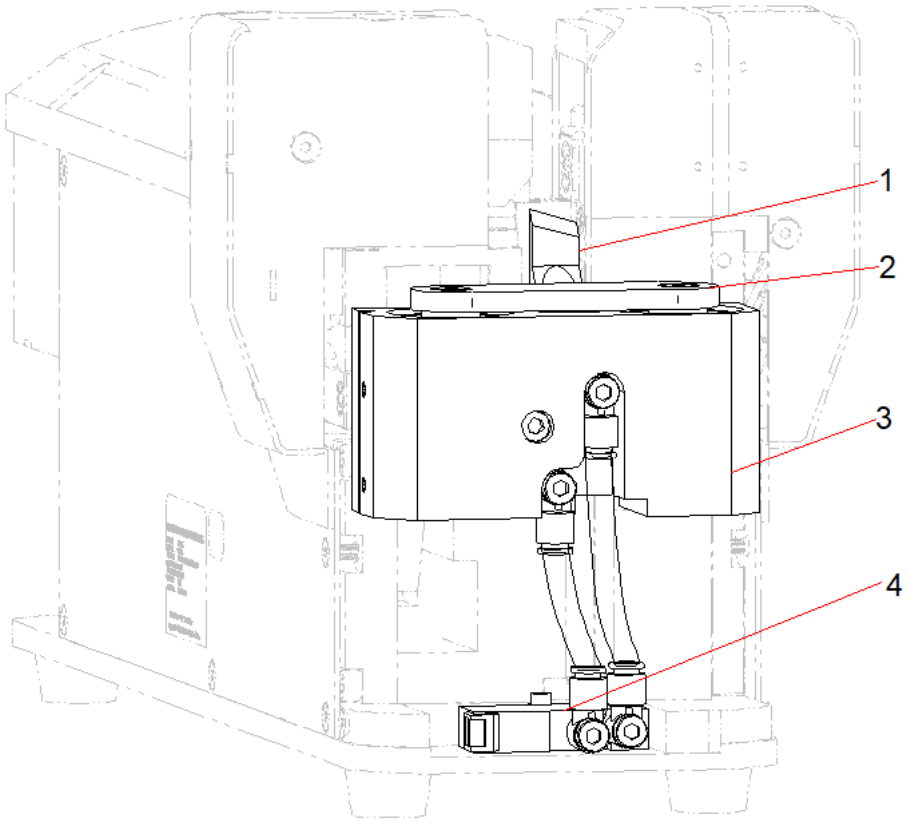

Table 2.9 Cutter Assembly (Optional)

Item	Description	EDP
1	Cutter Blade	1006947
2	Cutter Bracket	1006962
3	Cutter Cylinder	1007121
4	Valve	1009980

2.2.4 3/8” Tooling Option

1/2” tooling is the standard configuration for GMX-W1, and 3/8” tooling is an optional configuration. If a 3/8” tooling is used, there are 5 parts that need to be changed, otherwise the tooling will not work. The 1027148 is a small head screw, the standard screw cannot apply to tooling 3/8”. EPD numbers are shown below.

Table 2.10 Tooling unit (optional)

Item	Description	EDP (Tooling)		
		1/2”	3/8”	Fine 3/8”
1	Horn	1026519	1027984	1027877
2	Anvil Tip	1005751	1026450	1027876
3	Anvil Guide	1005759	1026448	1027874
4	Gather Tip	1005757	1026449	BU-1027875
5	Screw	1014497	1027148[1]	1027148[1]

[1]1027148 is a small head screw, the standard screw cannot apply to tooling 3/8”.

2.3 Compatibility With Branson Products

Table 2.11 Controller compatibility with Branson Metal Welding Converters

Branson Model	Converter
20 kHz/4000 W	CJ20

2.4 Ultrasonic Theory

2.4.1 What is an ultrasonic weld?

Ultrasonic welding joins metal parts by applying the energy of high frequency vibrations onto the interface area between the parts to be welded.

2.4.1.1 How does it work?

Electrical Energy is transformed into high frequency mechanical vibration. This mechanical vibration is transferred to a welding tip through an acoustically tuned horn. The parts are "scrubbed" together under pressure at 20,000 cycles per second. This high frequency vibration, applied under force, disperses surface films and oxides, creating a clean, controlled, diffusion weld. As the atoms are combined between the parts to be welded, a true, metallurgical bond is produced.

Figure 2.10 How does ultrasonic welding work?

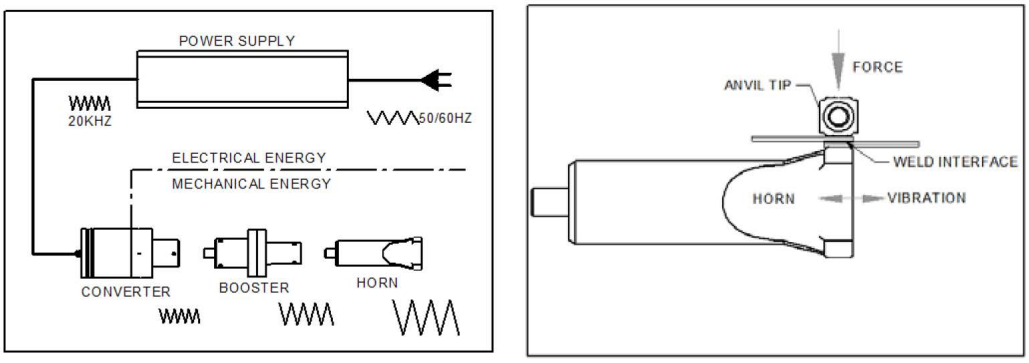

2.4.2 Benefits of ultrasonic welding

Ultrasonic metal welding exhibits unique welding properties that include:

- Excellent electrical, mechanical, and thermal connections between similar and dissimilar metals
- Low heat build up during the ultrasonic process (no annealing of materials)
- Compensation for normal surface variations of the material
- Ability to clean surface oxides and contaminants prior to welding
- Ability to weld large areas using minimal energy
- Ability to weld thin materials to thick materials
- Low cost per weld

2.4.3 How is an ultrasonic weld made?

Although the theoretical process of producing an ultrasonic weld is uncomplicated, the interactions of the various weld parameters are important and should be understood. When producing an ultrasonic weld, there are three primary variables that interact; they are:

- **Time:** The duration of applied ultrasonic vibration
- **Amplitude:** The longitudinal displacement of the vibration
- **Force:** The compressive force applied perpendicular (normal) to the direction of vibration

The power required to initiate and maintain vibration (motion) during the weld cycle can be defined as:

Table 2.12 Calculating Power

P = F x A x f	Where: • P = Power (watts) • F = Force* (N) • A = Amplitude (microns) • f = Frequency (Hertz)

*Force = (Surface Area of the Cylinder) X (Air Pressure) X (Mechanical Advantage)

Energy is calculated as;

Table 2.13 Calculating Energy

E = P x T	Where: • E = Energy (joules) • P = Power (watts) • T = Time (seconds)

Thus the complete 'Weld To Energy' process would be defined as:

E = (F x A x f) x T

A well designed ultrasonic metal welding system will compensate for normal variations in the surface conditions of the metals by delivering the specified energy value. This is achieved by allowing Time (T) to adjust to suit the condition of the materials and deliver the desired energy.

2.4.4 Welding To Energy - Why?

Most metal welding applications are produced by 'Welding To Energy' in order to compensate for the various surface oxides and contaminants associated with the metals being joined. In a few applications 'Welding To Time' or 'Welding To Height' will yield better results. Since the majority of all metal welds are produced using energy as the controlling factor we will confine our discussion to that condition.

Welding to energy is necessary because of the non-metallic oxides that form on the metal's surface as well as other contaminates such as grease and dirt. To produce quality welds reliably it is necessary that the surfaces to be joined are clean. The high frequency scrubbing action, combined with pressure, cleans the weld interface at the beginning of the weld process.

The following graph (Figure 2.11) illustrates a weld produced. The weld 'power graph' is sometimes referred to a weld 'footprint'. It can be used to visualize the weld cycle and assists in parameter optimization. Graphs from consecutive welds will vary slightly as the system dynamically adjusts time to accommodate varying surface conditions. The weld power data is gathered by sampling the power used in 1 millisecond intervals.

Figure 2.11 Weld Power Graph for Clean and Dirty Components, and when Part is Missing

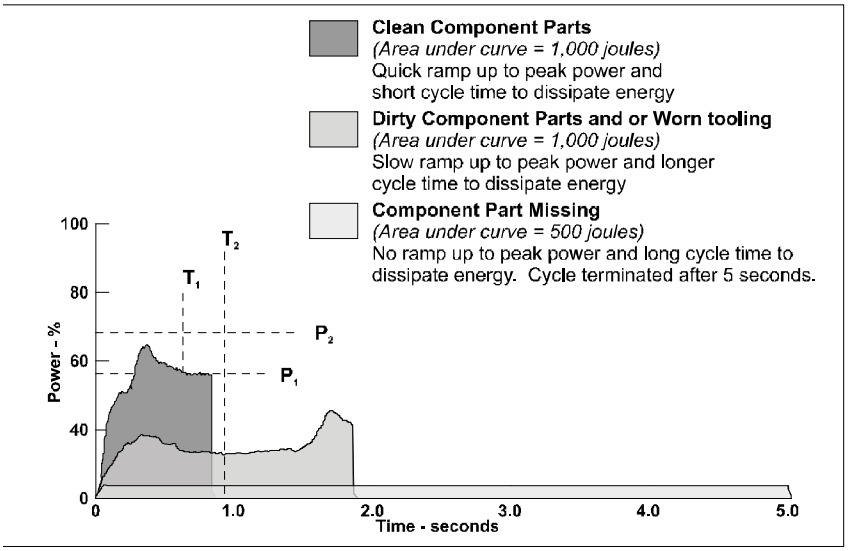

2.4.5 Power

The converter/booster/horn (stack assembly), requires minimal electrical power to initiate and maintain motion (vibration) at a 'no-load' condition. As the mechanical load increases, the power required to maintain the mechanical vibration also increases. The maximum power required during a weld cycle is 'Peak Power'.

By increasing Pressure and maintaining all other parameters, the mechanical load or force on the weld joint increases, therefore, the amount of Power required to maintain the vibration of the stack increases. Subsequently, because of the increased Power Level, less time is required deliver the same amount of Energy. This relationship is illustrated on Figure 2.12.

Figure 2.12 Pressure Variable with Increased Power

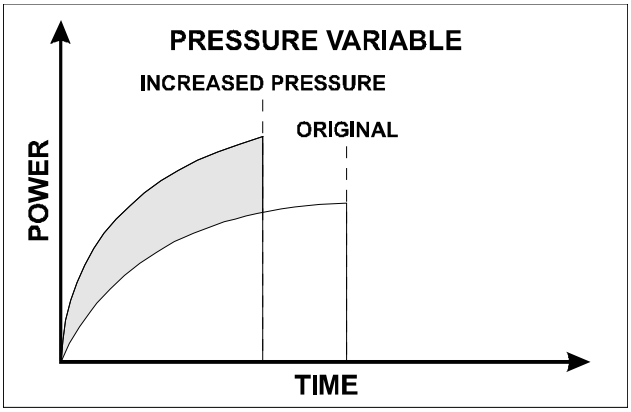

The difference in the appearance of each of the above weld graphs is the result of increased Power loading. Based upon an increase in Pressure, additional Power is required to maintain the motion of vibration. Thus, the same amount of energy is delivered in less time. This approach is typically used to raise the loading of the controller during a weld cycle to the desired level as determined by the application.

2.4.6 Time

The time required to deliver the necessary energy is defined as the Weld Time. For most welds, the time required will be less than one second. If more energy is required and all other weld parameters are maintained, the weld time will increase (Figure 2.13).

Figure 2.13 Pressure Variable with Increased Time

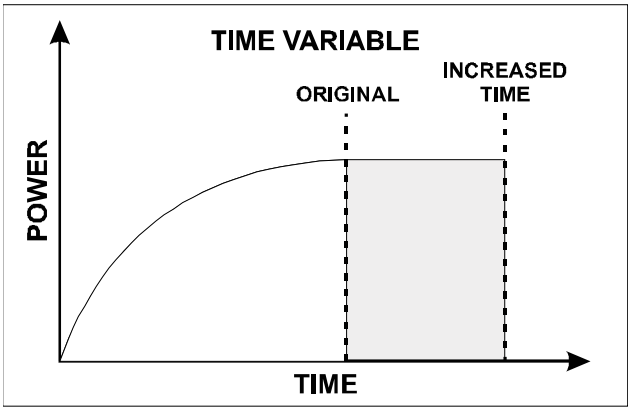

2.4.7 Amplitude

An ultrasonic tool is a resonant acoustical device. The term Amplitude is used to describe the amount of longitudinal expansion and contraction that the tooling endures as it vibrates (Figure 2.14). The amplitude correlates to the scrubbing action at the weld interface. This scrubbing action combined with pressure is what advances the weld by a diffusing or mixing of the base materials.

Figure 2.14 Scrubbing Action on Weld Interface

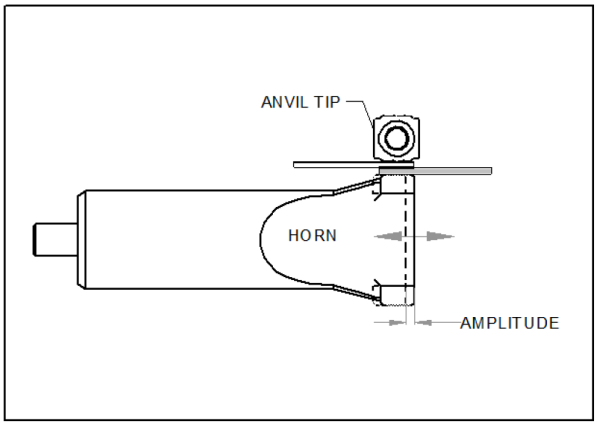

As previously mentioned, the converter/ booster/ horn, (stack assembly), requires minimal electrical power to initiate and maintain vibration in a 'no-load' condition. As the amplitude increases, the power required to maintain the increased velocity of vibration also increases. Subsequently, because of the increased Power less time is required deliver the same amount of Energy. This relationship is illustrated in the following power diagram (Figure 2.15):

Figure 2.15 Amplitude's Influence on Weld Power and Time

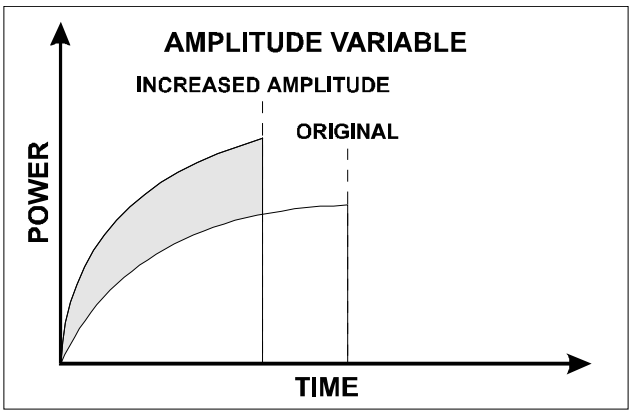

2.4.8 Amplitude Stepping

In standard practice, the scrubbing amplitude at the weld interface is maintained constant during a weld cycle. Recent advances in technology have made it possible to change the amplitude of the horn face during the weld cycle. This is known as Amplitude Profiling. Figure 2.16 illustrates a typical profile where the amplitude is reduced during the cycle. This type of profile is used mostly with welding aluminum to increase weld strength and to help prevent sticking to the tooling.

Figure 2.16 Amplitude Stepping Profile

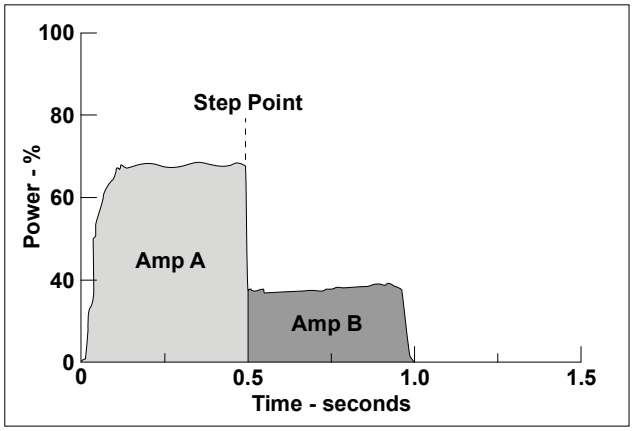

2.4.9 Resonant Frequency

The ultrasonic tooling acts as a spring having node points and anti-node points. The mechanical energy used to vibrate the tool is created by the converter. As the vibrations are propagated through the acoustical tool, a harmonic resonance is established consisting of nodes and antinodes. This action results in a resonant wave being transferred through the tooling (Figure 2.17). The efficiency of the resonant wave transfer depends on the natural resonant frequency of the horn and is determined by two factors:

- The speed of sound through the material
- The geometric shape of the object

The GMX-W1 resonant frequency is approximately 20 kHz.

Figure 2.17 Harmonic Resonance on Ultrasonic Tooling

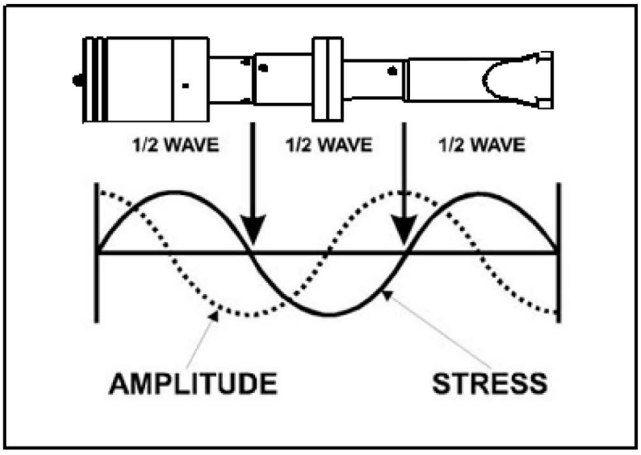

2.4.10 Avoiding An Overload Condition

It is possible to increase the Amplitude and or the Pressure to a point where the power available is not adequate to initiate or maintain vibration under the given mechanical load. At this point, the controller will stall resulting in an Overload condition. Electronic circuits in the system will protect the controller if this condition exists.

2.4.11 Welding To Time

In specific applications, 'Welding To Time' may be desired. As previously mentioned, there are three primary variables that interact; they are:

- **Time:** The duration of applied ultrasonic vibration.
- **Amplitude:** The longitudinal displacement of the vibration.
- **Force:** The compressive force applied perpendicular (normal) to the direction of vibration.

Generally, welding for a specific time will produce acceptable results when:

- The equipment is installed on an automated production line and each station must complete its process within a certain time limit.
- Very small low energy welds on clean components are being made.

2.4.12 Welding Temperature

Ultrasonic welding produces a localized temperature rise from the combined effects of elastic hysteresis, interfacial slip and plastic deformation. The weld interfaces reach approximately 1/3 the temperatures needed to melt the metals. Since the temperature does not reach the melting point of the material, the physical properties of the welded material are preserved. As the ultrasonic welding process is an exothermic reaction, as welding time increases so does weld temperature.

2.5 Terminology

Actuator: A mechanical device which houses the converter/booster/horn (stack) assembly in a rigid mounting and is utilized to move the anvil up or down. This allows for precise control of welding pressure while delivering mechanical vibrations from the ultrasonic stack to the work piece(s).

After Burst: A short duration (burst) of ultrasonic energy that begins after the weld is complete and at 1mm from the final height reading. Used when the splice nugget is sticking to the tooling.

Amplitude: Amplitude is the peak-to-peak displacement of mechanical motion as measured at the face of the horn tip. Amplitude is measured either in thousandths of an inch or in microns (e.g. a standard 20 kHz converter produces approximately .0004" or 10 microns of amplitude), Inches x 25.4 = microns. -- This is adjustable depending on system frequency and application tooling.

Anti-Node: The anti-node is the area of the horn and booster that exhibits maximum longitudinal displacement and where the internal dynamic forces are equal to zero. This area is at the face and back surface on half-wave technology.

Anvil: A device specially designed to grip the lower component and hold it stationary against the energy of vibration(s) which allows a weld to be created.

Booster: The central component of an ultrasonic stack assembly. A device which transfers mechanical energy from the Converter to the ultrasonic horn. The booster will, depending on design, increase, decrease, or maintain the specific amplitude as received from the converter.

Calibration: The process of adjusting a device to a known position for purposes of inspection and/ or monitoring position, direction, speed, and/or velocity.

Consumable Spare Tooling: The tooling portion of the ultrasonic system that wears and requires replacement due to production use. This includes but is not limited to ultrasonic horns, gather tip, anvil tip and anvil tip guild. A Spare Tooling Specification Sheet is included within the Actuator Operation Manual to document the spare tooling for a specific metal welding application.

Controller: The portion of the welding system that provides specific settings & instruction(s) to the overall welding system.

Converter: A device which utilizes a PZT (lead-zirconate-titanate) electrostrictive element to change high frequency electrical energy into high frequency mechanical energy.

Counter: A programmable counter built into the controllers maintenance software used to monitor system cycles and alert personnel when specific conditions are met.

Data: Any representations (s) of instructions, characters, information or analog quantities to which meaning may be assigned including weld parameters and weld results.

Default: A chosen system setting or parameter in which the system does not require external data input. In some cases the default value will be changed based upon equipment use.

Energy: Energy is the area beneath the ultrasonic power curve and is calculated in joules, (Watts X Seconds = Joules). When the ultrasonic welding system is setup in the "Weld In Energy" mode the system will deliver the amount of energy as programmed. NOTE: The maximum (default) time allowed for delivering ultrasonic energy is five (5) seconds.

Energy Mode: A welding method in which the ultrasonic controller is active until the required amount of energy is delivered (see ENERGY).

Fixture: A device for positioning and or holding a component for assembly.

Force: The amount of mechanical pressure that is used to deliver (bring down) the mechanical actuator. This programmed force is also called TRIGGER FORCE and is used to engage the knurl pattern into the component part(s) prior to the initiation of ultrasonic energy.

Frequency: The number of complete oscillations per second expressed in Hertz (Hz) or kilohertz (1 kilohertz = 1000 Hz). Typically 20 kHz or 40 kHz.

Gain: The ratio of the amplitude of motion produced by the Converter and delivered by the horn is called the gain. It is determined by the difference in mass on either side of the nodal point.

Gather Block: A specially designed mechanical device used to sweep across the face of the horn to collect the wire strands, and to form the width of the compression chamber for the wire to be spliced.

Height: A value, in millimeters (mm), as registered by a linear encoder upon completion of an ultrasonic welding cycle. -- Programmable, in millimeters, with Upper Control Limit & Lower Control Limit.

Height Encoder: A device utilized to monitor position, direction, speed, and/or velocity.

Horn: An acoustically designed metal tool that delivers mechanical energy from the converter/ booster into the work piece. Most applications utilize half wave technology.

Hold Time: The amount of time after delivery of ultrasonic energy until the stack tooling begins to retract from the component material(s).

Joint: The area where the surfaces are welded together.

Linear Height Encoder: See Height Encoder.

Loading Meter: A meter in the controller's weld results data which indicates the power drawn from the ultrasonic controller.

Maintenance Counter: Used to alert production personnel of the need to review/ inspect application tooling and/or the ultrasonic system for preventive maintenance purposes. (See Counters).

Mode: The method of operating the system (also see WELDING MODE).

Node: The node is the area of the horn, (and booster), that exhibits no longitudinal displacement and where the internal dynamic forces are at the maximum. This area is in the center location on half-wave technology.

Parameter(s): Programmable units used to control and or monitor the ultrasonic process. --Include but not limited to ENERGY, FORCE, PRESSURE, AMPLITUDE.

Parts Counter: Used to monitor system cycles and alert personnel when specific conditions are met. (See Counters).

Peak Power: Peak power is the maximum amount of power in watts that was required to keep the ultrasonic stack in motion during the weld cycle.

Power: Power, measured in watts, is a function of pressure and amplitude. The amount of power, (watts) required to keep the ultrasonic stack in motion is monitored and used to develop a power curve. This power curve is used to calculate the amount of energy delivered/ dissipated, (Watts = Joules / Time). The power as displayed on the control box is peak power.

Controller (Ultrasonic): An electronic device that converts 50/60 cycle electrical current into 20 kHz, (20,000) cycles per second high frequency electrical energy.

Controller Overload (Ultrasonic): The point or limit at which the amount of power in watts, required to keep the ultrasonic stack in motion, exceeds the available power from the controller. The system will go into an overload condition in order to prevent system damage.

Pre-Burst: A short duration (burst) of ultrasonic energy that begins after the Squeeze Time and before capturing the Pre-Height. Used when welding magnet wire. It helps to break up the insulation around the copper, and provide a small cooling period before the weld takes place.

Pre-Height: A pre-sonic inspection display, in millimeters (mm), as registered by a linear encoder prior to initiation of the ultrasonic welding cycle. -- Programmable, in millimeters, with Upper Control Limit & Lower Control Limit.

Presets: Welding parameters stored in the controller memory.

Pressure: The amount of mechanical pressure supplied to the anvil assembly while delivering ultrasonic energy to the components.

Quality Window & Limits: Programmable values used by the system to compare actual process data. Actual process data must be within limits or an alarm be issued.

Squeeze Time: The amount of time after the ultrasonic tooling engages the component(s) and before delivery of ultrasonic energy. -- Adjustable from 0 - 2 seconds.

Stress: Stress is the amount of dynamic force per cross sectional area.

Time: Time is the duration of the ultrasonic, mechanical, activity. Time is a component used to calculate the amount of ultrasonic energy delivered during a weld cycle, (Time = Joules / Watts).

Trigger Force: See Force.

Tuning: Adjusting to optimize controller performance according to resonance frequency, especially with regard to the horn and converter.

Velocity: The rate of motion at a specific time [velocity = distance time] Also referred to as speed.

Width Encoder: A device utilized to monitor the position of the gather block.

[This page intentionally left blank]

Chapter 3: Shipping and Handling

3.1 Shipping and Handling 44
3.2 Receiving 45
3.3 Unpacking the GMX-W1 System 46
3.4 Returning Equipment 47

3.1 Shipping and Handling

CAUTION	
	The controller and actuator may be heavy. Handling, unpacking, and installation may require the assistance of a colleague or the use of lifting platforms or hoists.

3.1.1 Environmental Specifications

The controller and actuator are sensitive to static discharge, and many of its components can be harmed if the unit is dropped, shipped under improper conditions, or otherwise mishandled.

The following environmental guidelines should be respected in the shipping of the GMX-W1 system.

Table 3.1 Shipping Specifications

Environmental Condition	Acceptable Range
Storage/Shipping Temperature	-13°F to +122°F (-25°C to +50°C)
Vibration (Transit)	0.53 g and (1 to 200 Hz) per ISTA Procedure 3A (while packaged)
Drop Test	ISTA Procedure 3A (while packaged)
Humidity	30% to 90% (non condensing)

3.2 Receiving

The GMX-W1 system is a sensitive device. Many of its components can be harmed if the unit is dropped or otherwise mishandled.

Branson equipment is carefully checked and packed before dispatch. It is recommended, however, that you follow the procedure below upon receiving your GMX-W1 system.

Table 3.2 Inspect the system

Step	Action
1	Verify that all parts are complete according to the packing slip.
2	Check the packing and the unit for damage (visual inspection).
3	Report any damage claims to your carrier immediately.
4	Determine if any component has become loose during shipping and, if necessary, tighten screws.

NOTICE	
	If the goods delivered have been damaged during shipping, please contact the forwarding agent immediately. Retain packing material (for possible inspection or for sending back the unit).

3.3 Unpacking the GMX-W1 System

The GMX-W1 system is fully assembled. It is shipped in several sturdy cardboard box. Some additional items are shipped in a canvas box with the product. Note orientation of packaging material in case return/repack is necessary. When unpacking the system, take the following steps:

Table 3.3 Unpacking the GMX-W1 system

Step	Action
1	Unpack the system as soon as it arrives. Save the packing material.
2	Verify you have all of the equipment ordered. Some components are packed inside other boxes.
3	Inspect the controller, actuator, monitor and main harness for signs of damage.
4	Remove the covers of the controller and actuator to check if any components became loose during shipping.

3.4 Returning Equipment

NOTICE	
	To return equipment to Branson, you must first obtain an RGA number from a Branson Metal Welding representative, or the shipment may be delayed or refused.

If you are returning equipment to Branson for repair, you must first call the Repair department to obtain a Returned Goods Authorization (RGA) number. (If you request it, the repair department will fax a Returned Goods Authorization form to fill out and return with your equipment).

Branson Metal Welding Repair Department

120 Park Ridge Road

Brookfield, Connecticut 06804 U.S.A.

Direct telephone number: (203) 796-0807

Fax number: (203) 796-0574

- Provide as much information as possible that will help identify the need for repair
- Carefully pack the equipment in original packing cartons
- Clearly label all shipping cartons with the RGA number on the outside of cartons as well as on your packing slip, along with the reason for return
- Return general repairs by any convenient method. Send priority repairs by air freight
- You must prepay the transportation charges FOB Brookfield, Connecticut, U.S.A.

3.4.1 Get an RGA Number

RGA#_____

If you are returning equipment to Branson, please call the Repair Department to obtain a Returned Goods Authorization (RGA) number. (At your request, the Repair Department will fax an RGA form to fill out and return with the equipment).

3.4.2 Record information about the Problem

Before sending equipment for repair, record the following information and send a copy of it with the equipment. This will greatly increase Branson's ability to address the problem.

1. Describe the problem; provide as much detail as possible. For example, is the problem intermittent? How often does it occur? How long before it occurs after powering up?

   _____
   _____
   _____
   _____
   _____

2. Is your equipment in an automated system?

   _____
   _____
   _____

3. If the problem is with an external signal, which signal? If known, include plug/pin # (e.g., P29, pin #3) for that signal:

   _____
   _____
   _____

4. What are the Weld Parameters?

   _____
   _____
   _____

5. What is your application? (Type of weld, metal material, etc.)

   _____
   _____
   _____

6. Name and phone number of the person most familiar with the problem:

   _____
   _____
   _____

- Contact the Branson Metal Welding office prior to shipping the equipment.
- For equipment not covered by warranty, and to avoid delays, include a Purchase Order.

NOTICE	
	Send a copy of this page with the equipment being returned for repair.

3.4.3 Pack and Ship the Equipment

1. Carefully pack the system in original packing material to avoid shipping damage. Plainly show the RGA number on the outside of cartons as well as inside the carton along with the reason for return. Make a list of all components packed in the box. KEEP YOUR MANUAL.
2. Return general repairs by any convenient method. Send priority repairs by air freight. Prepay the transportation charges FOB the repair site (either the Branson field office or Brookfield, Connecticut USA location).

NOTICE	
	Items that are sent Freight Collect will be refused.

[This page intentionally left blank]

Chapter 4: Technical Specifications

4.1 Technical Specifications 52
4.2 Physical Description 53

4.1 Technical Specifications

NOTICE	
	All specifications are subject to change without notice.

4.1.1 Environmental Specifications

The GMX-W1 system has the following environmental specifications:

Table 4.1 Environmental Specifications

Environmental Condition	Acceptable Range
Ambient Operating Temperature	+41°F to +104°F (+5°C to +40°C)
Storage / Shipping Temperature	-13°F to +122°F (-25°C to +50°C)
Operating Altitude	Up to 6560 ft (2000 m)
Humidity	30% to 90% (non-condensing)
IP Rating	2X
Usability	In-door & Non-corrosivity

4.1.2 Electrical Specifications

The following tables list input voltage and current requirements for the GMX-W1.

Table 4.2 Electrical Input Operating Voltages

Controller Rating	Input Operating Voltage
4000 W	200~230 VAC Nominal, 50/60 Hz, Single Phase

Table 4.3 Input Current Specifications

Model	Power	Current Rating
20 kHz	4000 W	25 A Max.

Table 4.4 Continuous Duty Max. Power

Model	Power	Continuous Duty. Max. Power
20 kHz	4000 W	1200 W

4.2 Physical Description

This section describes the physical dimensions of the GMX-W1 system.

NOTICE	
	Dimensions are nominal.

Table 4.5 Dimensions and Weights of GMX-W1 Controller

Width	Height	Depth	Weight
446 mm (17.56”)	145 mm (5.71”)	657 mm (25.86”)	22.7 kg (49.9 lb)

Table 4.6 Dimensions and Weights of GMX-W1 Actuator

Width	Height	Depth	Weight
175 mm (6.89”)	215 mm (8.48”)	505 mm (19.90”)	25 kg (55 lb)

For detailed dimensional information refer to Chapter 5: Installation and Setup.

[This page intentionally left blank]

Chapter 5: Installation and Setup

5.1 About Installation 56
5.2 Handling and Unpacking 57
5.3 Installation Requirements 58
5.4 Installation Steps 62
5.5 Safety Devices 67
5.6 Still Need Help? 68

5.1 About Installation

This chapter is intended to help the installer with the basic installation and setup of your new GMX-W1 system. This chapter will bring the reader to the point at which the system is functionally "ready to weld".

CAUTION	
	The actuator and related components are heavy. Handling, unpacking, and installation can require help or the use of lifting platforms or hoists.

International safety labels are found on the controller and actuator. Those that are of importance during installation of the system are identified in the figures in this and other chapters of the welding system manuals.

5.2 Handling and Unpacking

If there are any visible signs of damage to the shipping containers or the product, or you later discover hidden damage, take pictures, and NOTIFY YOUR CARRIER IMMEDIATELY. Save the packing material.

1. Unpack the GMX-W1 components as soon as they arrive. Refer to the following procedures
2. Verify you have all of the equipment ordered. Some components are packed inside other boxes
3. Inspect the controls, indicators, and surfaces for signs of damage
4. Save all packing material. Evaluation systems will be returned using this material

5.2.1 Unpack the Controller

Controllers are shipped in a cardboard carton. Controllers weight approximately 23 kg (50 lb).

1. Open the box, remove foam top packing half and lift the controller out
2. Remove the start-up key and disk shipped with the controller. These items may be shipped in small, separate boxes, or underneath the controller in the box
3. Save the packing material; evaluation systems will be returned using this packing material

5.2.2 Unpack the Actuator

CAUTION	
	Equipment exceeds 40 lb. Be careful in overturning when handling.

The actuator, is assembled and ready to install. The actuator weights approximately 25 kg (55 lb). Move the shipping container close to the intended installation location, leave it on the floor.

1. Open the top of the cardboard box, remove the insert from the top of the box and set it aside. And then take out the machine carefully.
2. E-STOP switch is shipped with the actuator. Take out the E-STOP switch from the package.
3. Save the packing material

5.2.3 Unpack the Main Harness

Main harness is shipped in a cardboard carton. It weights approximately 15 kg (33 lb).

1. Open the box, remove the top foam and lift the main harness out
2. The VGA cable and toolkit are shipped with the main harness. Take out the VGA cable and toolkit from the box
3. Save the packing material

5.2.4 Unpack the Monitor

The monitor is shipped in a cardboard carton.

1. Open the box, take out the monitor
2. Save the packing material

5.2.5 Unpack the Optional Components

Optional components include the foot switch and some tools. The foot switch is shipped in a separate cardboard carton; tools may be shipped in box of its own.

1. Open the carton, take out the foot switch. Save the packing material
2. Keep the tools in its box

5.3 Installation Requirements

5.3.1 Location

The GMX-W1 system is intended to be manually operated by using foot switch or palm switch. If the foot switch is connected into the system, the palm switch will automatically turn to be unavailable in system. It can be installed at a safe and comfortable workbench height (approximately 30-36 inches) with the operator sitting or standing in front of the system. The controller may be located up to 3 meters, 9 meters or 15 meters away from the GMX-W1 actuator. There are 3 types of different length main harness options.

The controller must be accessible for user parameter changes and settings, and must be placed in a horizontal orientation. The controller should be positioned so it does not draw in dust, dirt or material via its rear fans. Refer to the illustrations on the pages that follow for a dimensional drawing of each component.

5.3.2 Environmental Specifications

Table 5.1 Environmental Specifications

Environmental Condition	Acceptable Range
Ambient Operating Temperature	+41°F to +104°F (+5°C to +40°C)
Storage / Shipping Temperature	-13°F to +122°F (-25°C to +50°C)
Operating Altitude	Up to 6560 ft (2000 m)
Humidity	30% to 90% (non-condensing)
IP Rating	2X
Usability	In-door & Non-corrosivity

5.3.3 Dimensional Drawings

Figure 5.1 Controller Dimensional Drawings

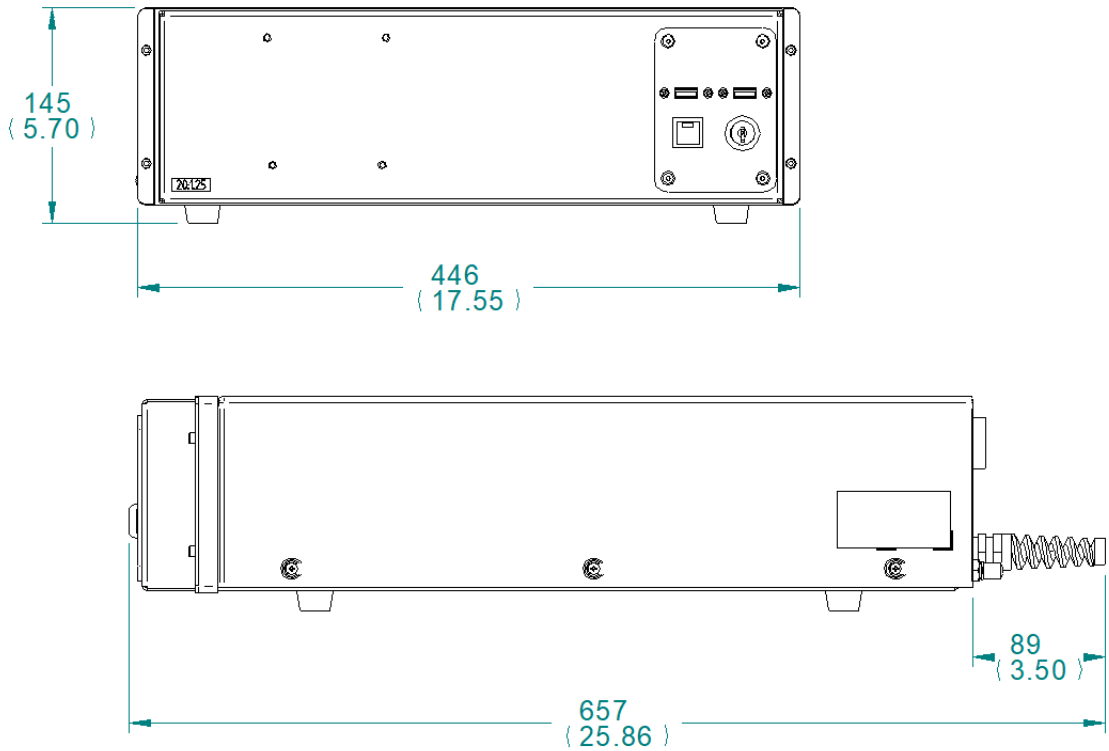

Figure 5.2 Actuator Dimensional Drawing

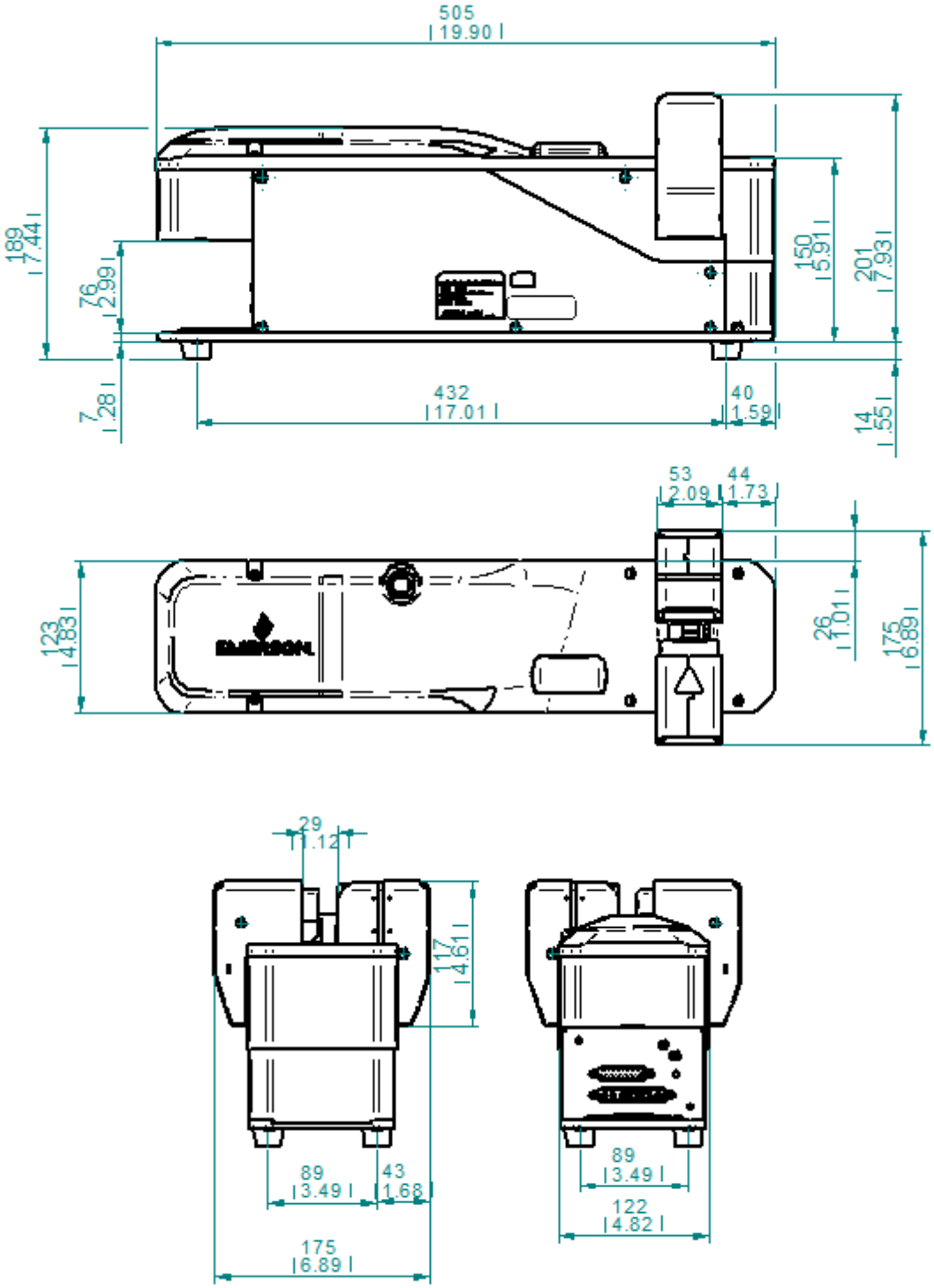

5.3.4 Electrical Input Power Ratings

Plug the controller into a single-phase, grounded, 3-wire, 50 or 60 Hz power source.

Table 5.2 Electrical Input Operating Voltages

Controller Rating	Input Operating Voltage
4000 W	200~230 VAC Nominal, 50/60 Hz, Single Phase

Table 5.3 Input Current Specifications

Model	Power	Current Rating
20 kHz	4000 W	25 A Max.

Table 5.4 Continuous Duty Max. Power

Model	Power	Continuous Duty. Max. Power
20 kHz	4000 W	1200 W

5.3.5 Factory Air

The factory compressed air supply must be “clean, dry and unlubricated” air, the recommended range is 4.8-6.9 bar (70-100psi).

CAUTION	
	Synthetic air compressor lubricants containing Silicone or WD-40 will cause internal actuator damage and failure due to the solvents contained within these types of lubricants.

5.3.5.1 Pneumatic Connections to System

Air connection to the GMX-W1 system is made to the air inlet connector on the rear of the controller. The air connection between the controller and actuator is made with a quick-connect safety pneumatic coupling and connector block.

5.4 Installation Steps

5.4.1 Mounting the GMX-W1 Actuator

The actuator is designed to be placed on a workbench (rubber feet on bottom).

5.4.2 Mounting the Controller

The controller is designed to be placed on a workbench (rubber feet on bottom) within cable length limits of the actuator. It has two rear-mounted fans which draw cooling air from rear to front, which must be free from obstruction. Do not place the controller on the floor or in other locations that will allow dust, dirt or contaminants to be drawn into the controller.

The control functions (USB x2, key lock switch, main power switch) on the front of the controller must be accessible for operation. See 5.4.9 Remote Box (Optional) for more information.

All electrical connections are made to the rear of the controller, which should be positioned in your workspace with adequate clearance (approximately 4 inches or more on either side, and 5 inches to the rear) for cable access and ventilation. Do not place anything on top of the controller case.

5.4.3 Mounting the Main Harness

5.4.3.1 Connecting the Actuator (Fixed Connect Block)

Plug the block to the rear of actuator until the front plate of block against to the plate of actuator, and then use two screws M5x85 to tighten connect block.

Figure 5.3 Connecting the Actuator (Fixed Connect Block)

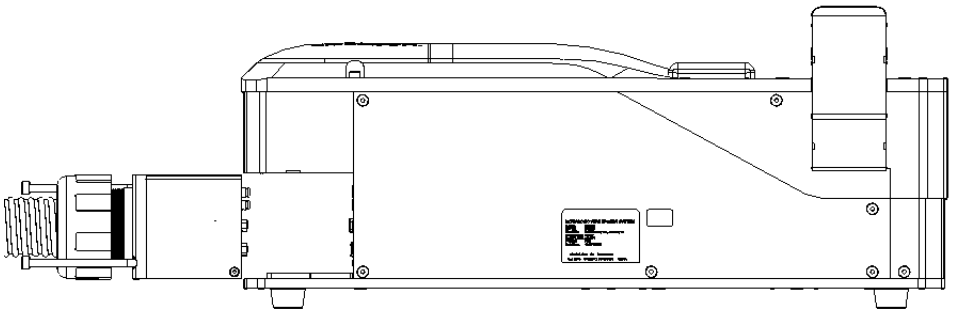

5.4.3.2 Connecting the Actuator (Optional Quick Connect Block)

Step 1: Plug the block to the rear of actuator until the front plate of block against to the plate of actuator.

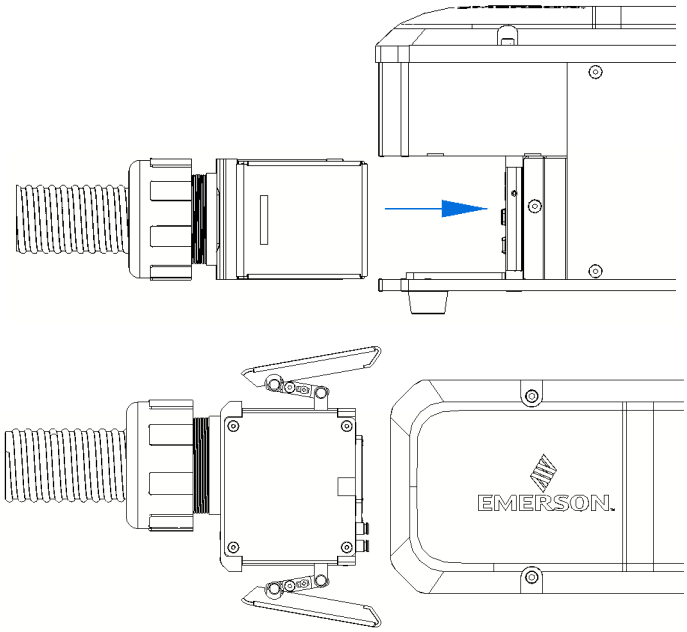

Step 2: Lock the two plates on the side.

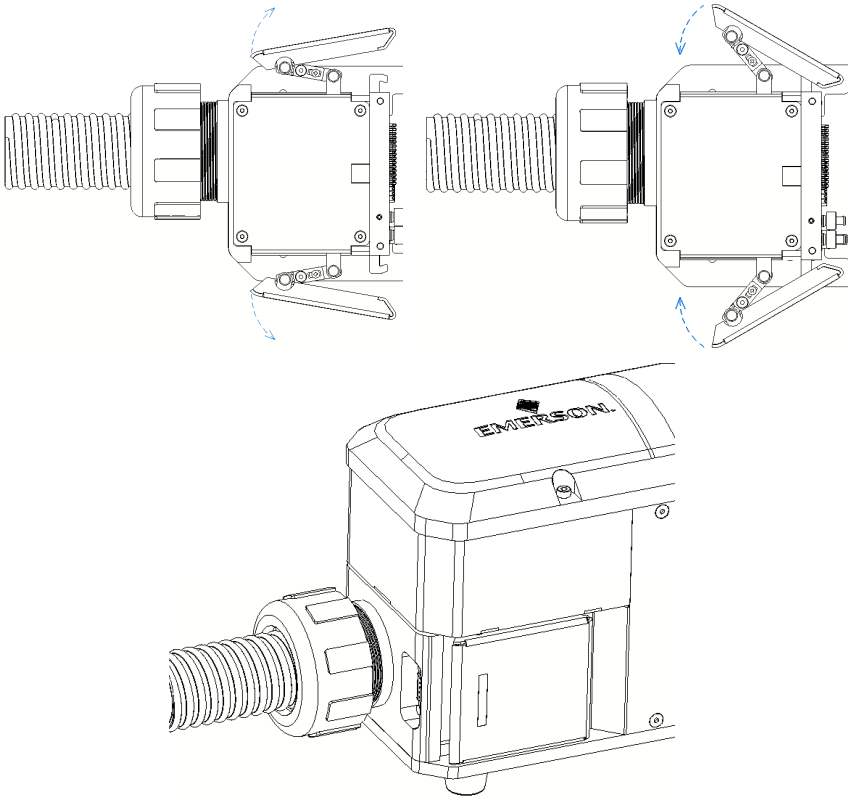

5.4.3.3 Connecting the Controller

All the connectors must softly connect into the counterpart receptacle. Connector must match with each other. Pins and sockets should be aligned and parallel. Misalignment may cause contact failure. Connector function is list in the rear panel.

Figure 5.4 Connecting the Controller

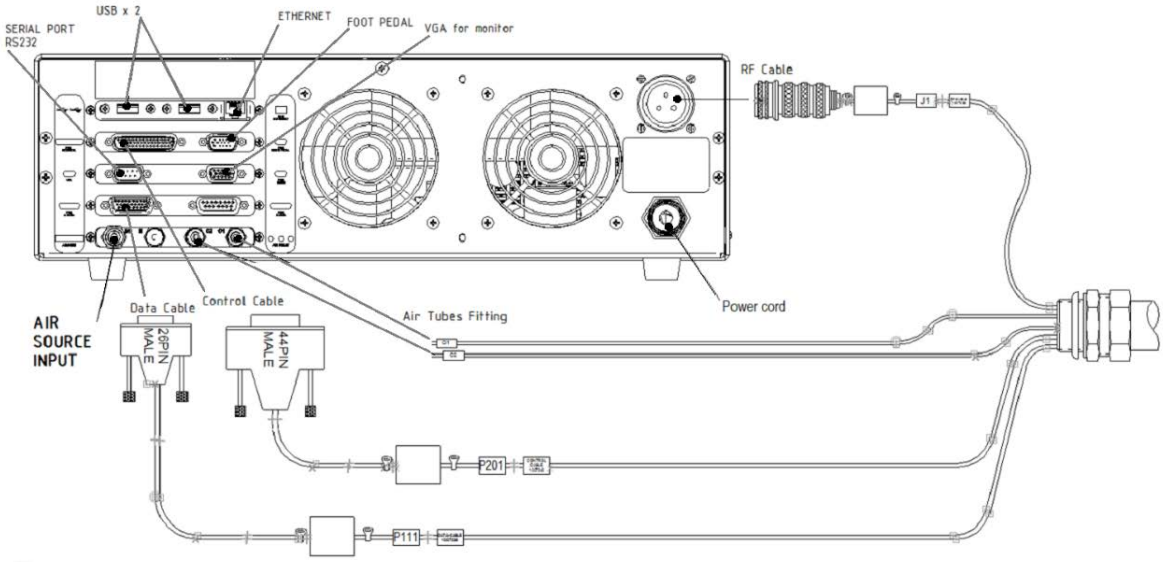

5.4.4 Mounting the Foot Switch

If the foot switch needs to be used, put it on the ground and plug the D-SUB to the connector at rear of controller as shown in Figure 5.4. Palm start switch on the actuator will be disabled automatically.

5.4.5 Mounting the E-Stop Switch

Put the E-Stop Switch at a suitable place near the Actuator and plug the D-SUB to the connector at rear of Main harness Block.

Figure 5.5 Mounting the E-Stop Switch

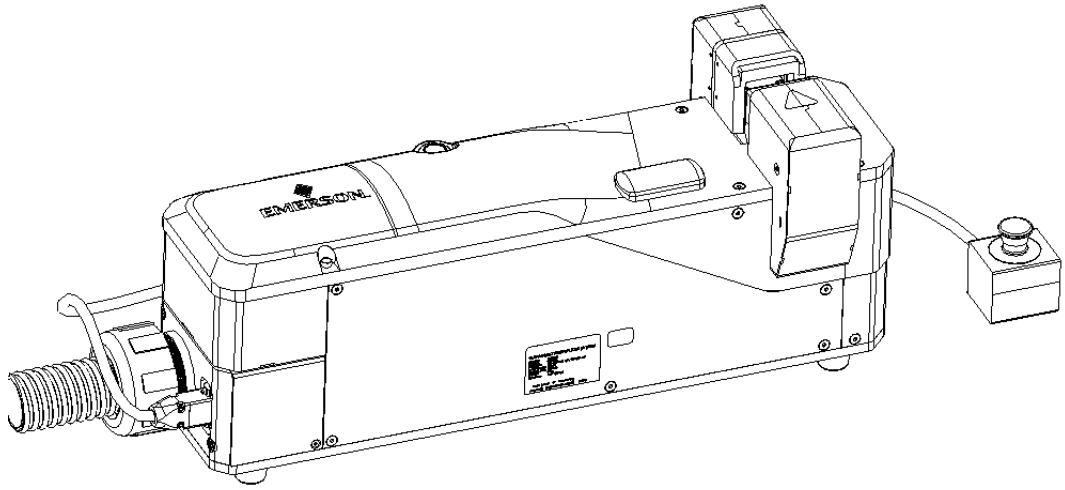

5.4.6 Mounting the Monitor

Put Monitor at suitable place, connect Monitor and Controller with the VGA Cable. The D-SUB should be plug rightly as shown in Figure 5.4.

5.4.7 Input Compressed Air

Connect the controller and air source with a 5/16” tub. The length depends on the actual condition, and the tube needs to be ready in advance. The air inlet of the controller is show in Figure 5.4.

5.4.8 Input Power (Main)

The system requires single-phase input power, which you connect to the controller using the integral power cord. See Table 5.3 for plug and receptacle requirements.

5.4.9 Remote Box (Optional)

The Remote Box is an optional configuration for the controller. The Remote Box integrates the front panel controls (USB x2, main power switch and key lock switch) into a removable panel.

If the power supply is mounted under the workbench and the control functions are not easy to access, the Remote Box allows to move the controls to an appropriate location.

Figure 5.6 Remote Box

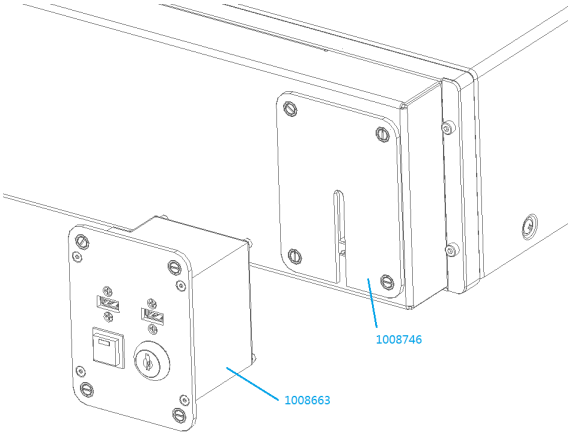

After unscrewing four M4 retainer screws on the remote box, the remote box can be moved from front panel of controller to other appropriate location. And then use the Remote Box External Cable (1009326) to build the connection. After the connection is built, use the Black Plate (1008746) to cover the controller front plane.

Following pictures shows the nominal dimensions for Remote Box (1008663). The drawing dimension unit is in millimeters.

Figure 5.7 Remote Box Dimensional Drawing

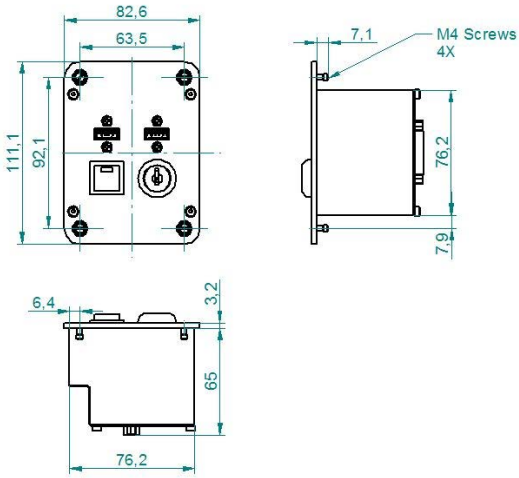

NOTICE	
	The Remote Box is an optional configuration for the controller. Please contact Branson for purchasing options.

5.5 Safety Devices

The removal, bridging or disabling of safety devices is not condoned for production operation.

5.5.1 Emergency Stop

In case of danger, hit the red, emergency stop. The actuator, controller, and related fixtures are returned to the “Home” position. Twist the emergency stop to reset the system. Free access to the emergency stop button must be maintained.

Figure 5.8 Emergency Stop

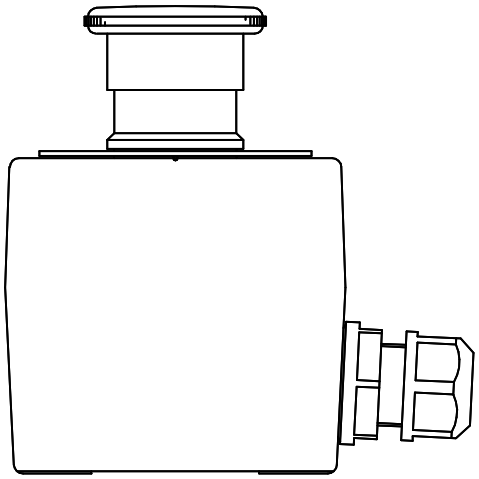

5.5.2 Actuator Covers

The GMX-W1 actuator is equipped with covers which should only be removed for maintenance and installation purposes.

5.6 Still Need Help?

Branson is pleased that you chose our product and we are here for you! If you need parts or technical assistance with your GMX-W1 system, call your local Branson Metal Welding representative or contact Branson customer service by calling the appropriate department as indicated in 1.3 Contact Us.

Chapter 6: Operation

6.1 Operation 70
6.2 Log In 71
6.3 Main Menu 72
6.4 Create Menu 75
6.5 Setup & Teach Mode Menu 78
6.6 Operate Menu 82
6.7 View Data Menu 84
6.8 Maintenance Menu 87
6.9 Settings Menu 91
6.10 Test the Welding System 100
6.11 Establishing Weld Parameters 102
6.12 How to build the communication with laptop. 109

6.1 Operation

This section describes how to operate the GMX-W1 actuator.

CAUTION	
	Avoid situations where fingers could be pinched between the plastic safety cover and the anvil.

The GMX-W1 actuator is controlled by the controller. The actuator sends operating cycle data, and status information to the controller. The controller sends operating parameters to the actuator, determining how and when cycles are initiated and terminated.

6.2 Log In

Make sure that every hardware connection is correct, and power up the unit then.

When the welding system start up, a user name and password are required for the system log-in. In order to initial system or demonstrate system, you can use the system default user name and password (or provided by your sales consultant) to login system as following:

- User Name: Default (case-sensitive)
- Password: 0000

Figure 6.1 Log In

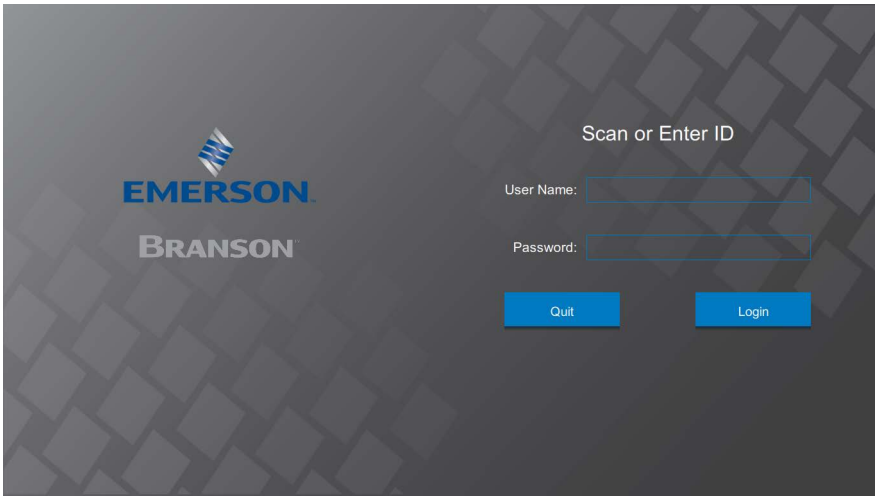

Click on the input box, a popup full keyboard will come on the screen.

Figure 6.2 Entering Credentials

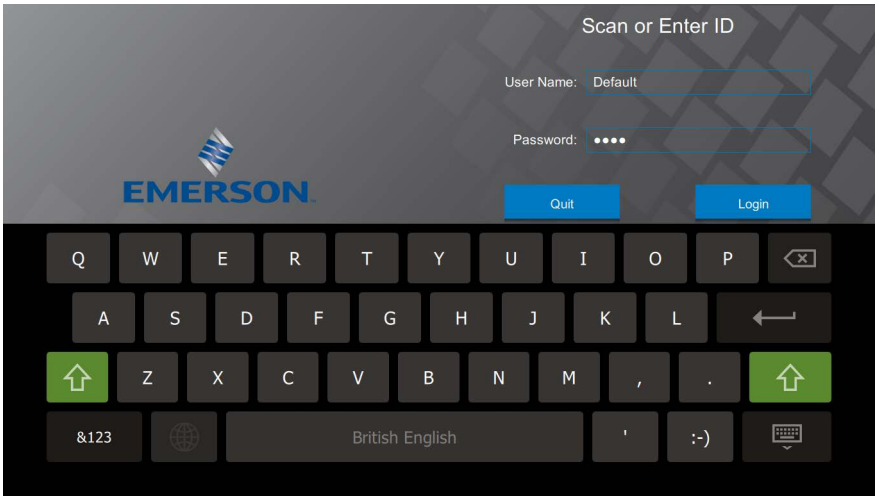

6.3 Main Menu

Main menu should display on the screen after the user login into the welding system.

Figure 6.3 Main Menu

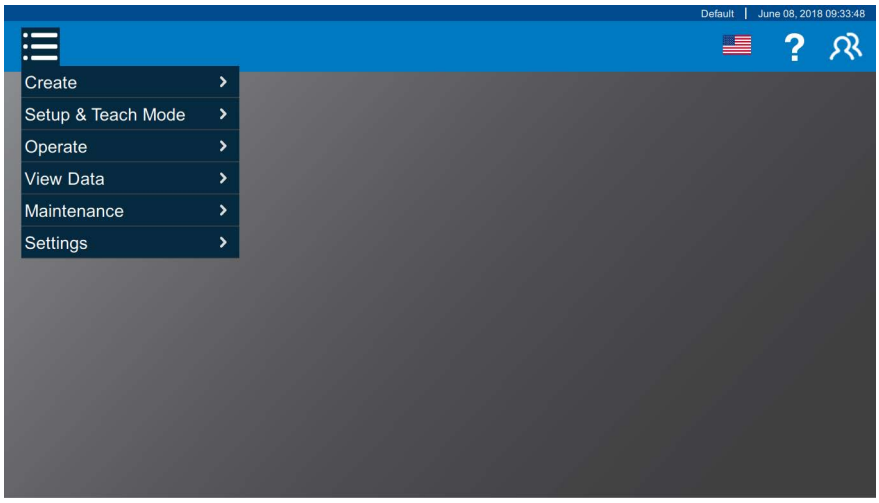

Some items have shortcut keys which can be used to switch screens in one step. The table of shortcut keys is shown below.

Table 6.1 Shortcut Keys

Shortcut Key	Function
F1	Open/Close Menu
F2	Create Splice
F3	Setup Splice
F4	Teach Mode
F5	Operate Splice
F6	Last Operate
F7	Weld Result History
F8	Configuration
F9	Library
F10	Calibration
F11	Advanced Maintenance
F12	Alarm/Error Log
←	Move cursor left
↑	Move cursor up
→	Move cursor right
↓	Move cursor down

6.3.1 Menu Button

Once the Menu Button is selected, the corresponding submenu list will be expanded under the Menu Button. There is also a shortcut key F1 to open/close the submenu list quickly. And there only needs to press the F1 key. When the submenu list is opened and then press the F1 key, the main menu will be closed. And when the submenu list is closed, and the submenu list will be opened. After the submenu list is opened, it can press the key "↑" or "↓" to move up or down.

Figure 6.4 Menu Button

Once the submenu button is selected, the corresponding content of screen will be reloaded that shall align to the submenu. The corresponding content of the submenu list can also be opened by pressing the shortcut key "→", and the content can be moved up or down through the key "↑" or "↓". There also can press the key "←" from the corresponding content to its submenu item.

Figure 6.5 Submenu

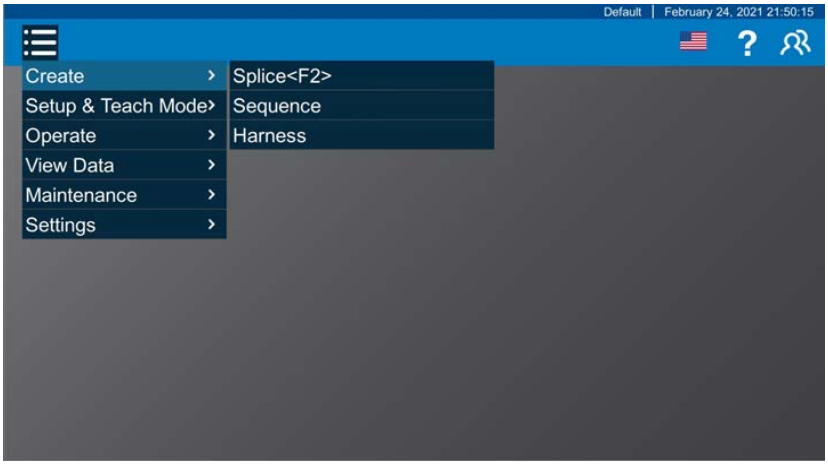

6.3.2 Language Button

Figure 6.6 Language Button

Once the Language Button is selected, the country flags grid will show on the screen on behalf of the language setting.

Figure 6.7 Language Selection

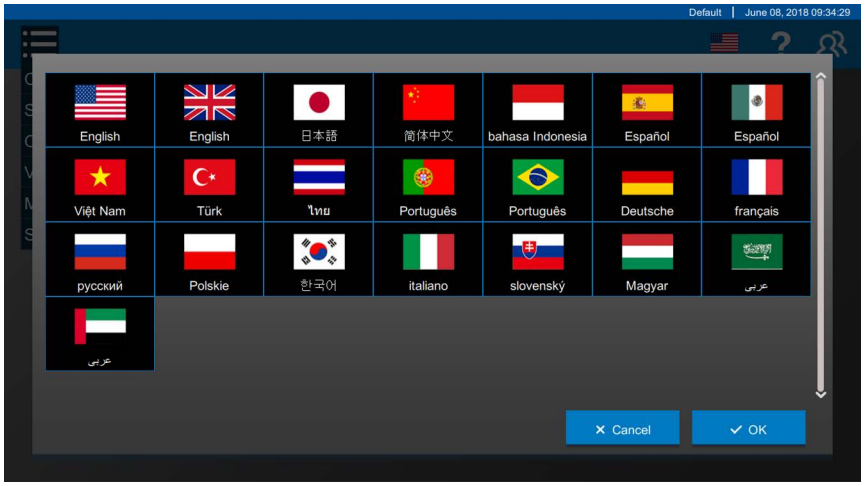

6.3.3 Help Button

Figure 6.8 Help Button

Regarding the function description or guidance of each screen, you always can get them from help button.

Figure 6.9 Help Description

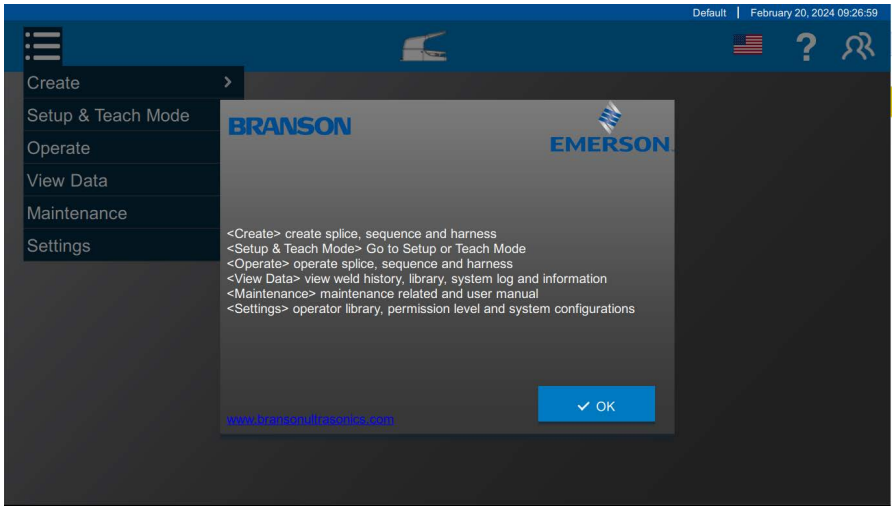

6.3.4 User Button

Figure 6.10 User Button

User Button can bring you to switch current account or close the system directly.

Figure 6.11 Switch User and Shut Down

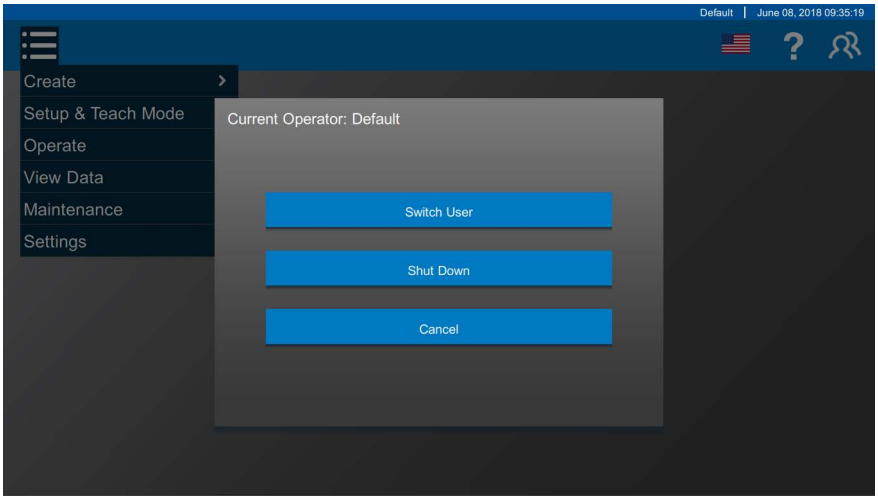

6.4 Create Menu

Touching Create option will guide you to create the three different kind of recipes of the system, such as Splice, Sequence and Harness. It can also be opened by pressing the key "→" when the cursor is on the Create option.

Figure 6.12 Create Menu

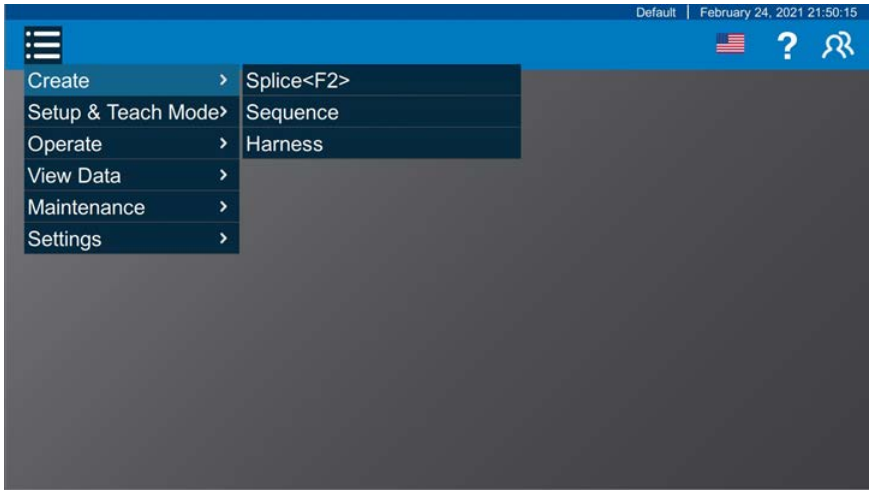

6.4.1 Create Splice

Touching Create->Splice option will take you to the Create Splices. Besides, the Create Splice screen can also be opened by pressing the shortcut key "F2" directly when the submenu list is closed. On the Create Splice screen, you can create the new splice for yourself. You are only required to enter a Splice name before saving, but you may also define the amount of wires on both sides of the splice along with the wire's description and physical characteristics.

Displayed on the upper middle section of the screen are the splice name and its total area. On the right of the splice section are the cycle and its number which is the weld total count. The left side of the screen can be used to create a new wire and edit a wire previously created. In the middle of the screen the wire map will be displayed.

Figure 6.13 Wire Builder

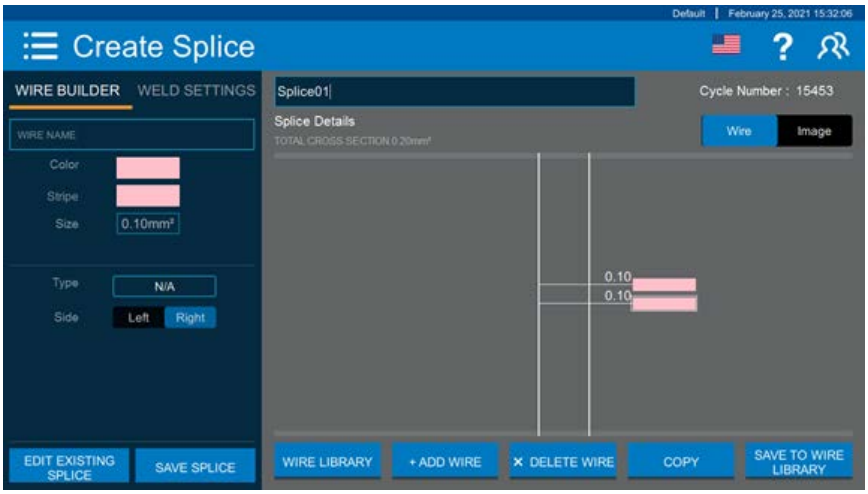

On the bottom of the screen on the wire map are the WIRE LIBRARY, ADD WIRE, DELETE WIRE, COPY and SAVE TO WIRE LIBRARY buttons. Regarding the wire general attribute setting and all basic operation, for example, copy, delete, recall and save, you do them on this screen. You also can change the wire side using drag-drop directly on the screen.

Touching WELD SETTINGS option will take you to Weld Setting screen where you can setup and fine-tune your wire splice presets. On this screen you can run and edit Weld, Advanced, and Quality settings for your creating preset.

In the middle of the screen on the left side are the Weld Settings Box, the Quality Setting box, and the bottom of the screen are the Advanced Settings button, the Graph button.

Figure 6.14 Weld Settings

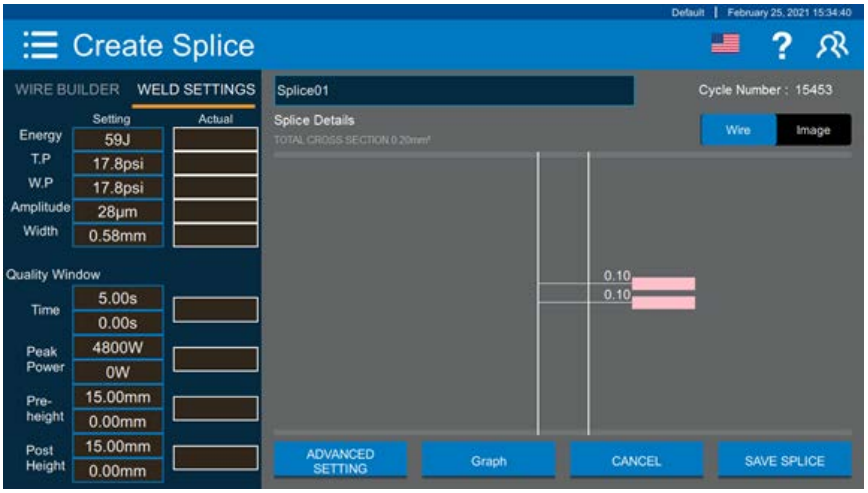

NOTICE	
	While on the Weld Setting screen, all changes made are automatically updated to the splice library.

The wire map cannot be edited on this screen. On the bottom of the screen you can see the buttons has been replaced with Advanced Settings, Graph, Cancel and Save Splice buttons.

6.4.2 Create Sequence

Select Create Sequence to input splice sequences. A sequence is a series of grouped wire splices which are to be executed in a particular quantity and order. Sequences are constructed using existing wire splices stored in the library. You also can Edit Existing Sequence or select a splice to Edit.

Figure 6.15 Create Sequence

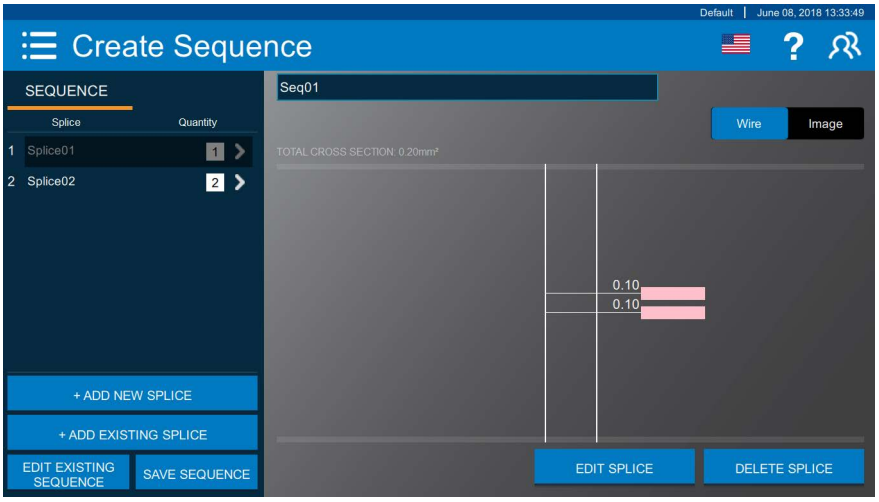

6.4.3 Create Harness

Select Create Harness to input splice Harnesses. A Harness is a series of grouped wire splices which are to be executed in an order and batch size. Harnesses are constructed using existing wire splices stored in the library. You also can Edit Existing Harness or select a splice to Edit.

Figure 6.16 Create Harness

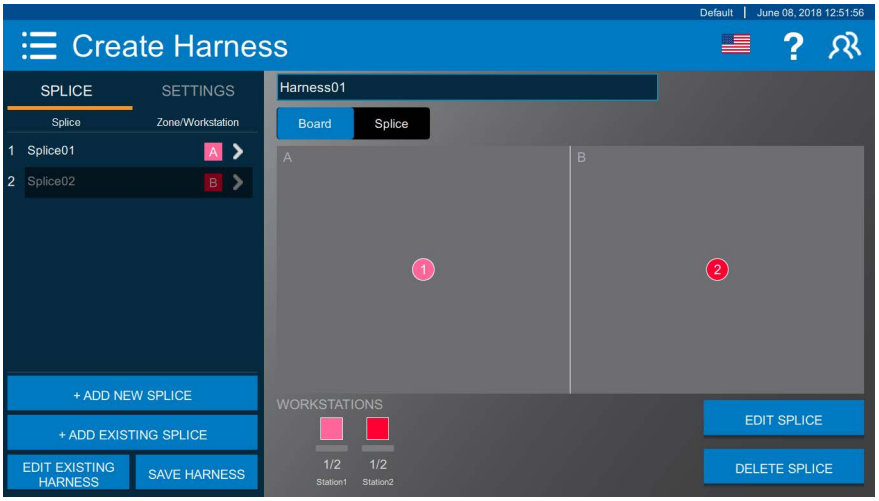

6.5 Setup & Teach Mode Menu

The options of the “Setup & Teach Mode” will take you to Setup screen or Teach Mode where you can change weld setting on the splice of you selected or you can get the reasonable upper and lower setting on the quality window using Teach Mode.

Figure 6.17 Setup & Teach Mode Menu

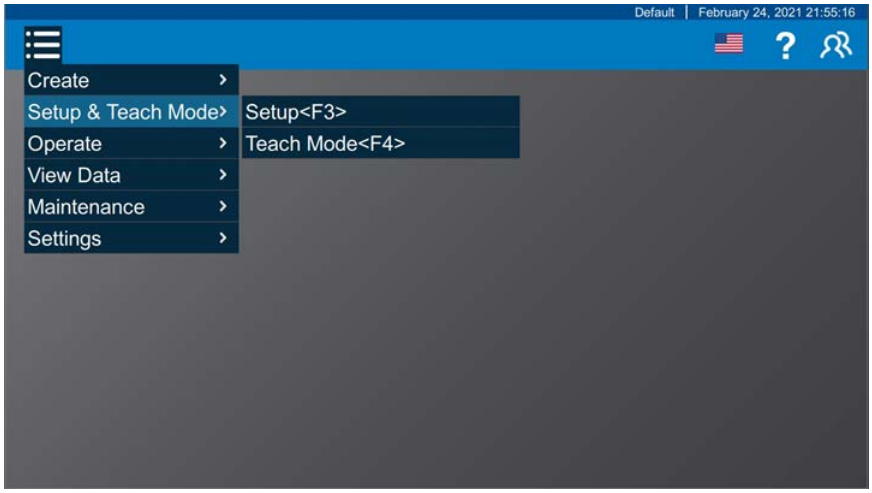

6.5.1 Setup

Select Setup Screen to change individual weld parameters which are the basic elements required to make a splice. The Setup Screen can also be opened by pressing the shortcut key "F3" directly when the submenu list is the closed status.

Figure 6.18 Setup Splice

See 6.4.1 Create Splice for more details on entering weld parameters.

6.5.2 Teach Mode

In the Teach Mode screen, the controller automatically derives the quality window's limits based on calculations performed on results from a splice sample set. There are three available teach modes: Standard Teach Mode, Auto Teach Mode, and Sigma Teach Mode. The screen can be opened directly by pressing the shortcut key "F4".

Figure 6.19 Teach Mode

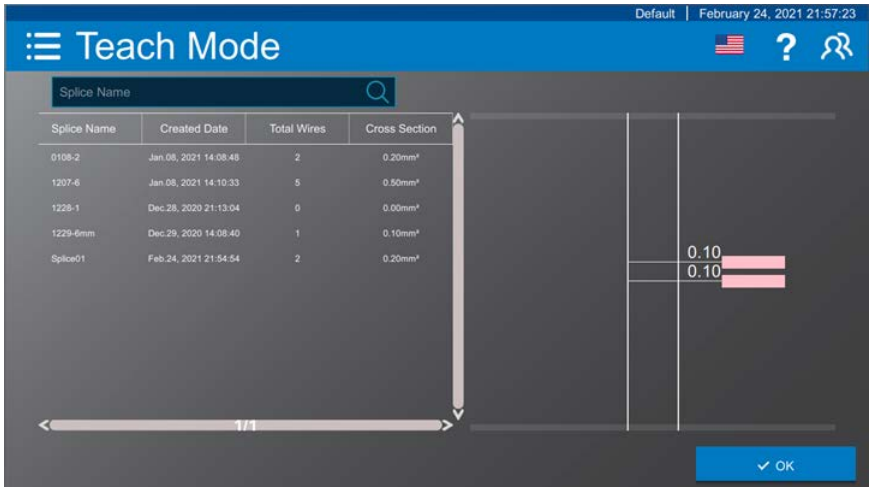

6.5.2.1 Standard Teach Mode

In the Standard Teach Mode the default quality windows (wide open) are used, and you may accept or reject each splice as part of the sample set. Upon successful completion of the sample set, the average values for Time, Power, Pre-Height, and Height are computed. The allowable min/max deviation percentages are factored in, and the resultant is used to calculate the weld settings and the quality window settings. The quantity of samples to be run and the allowable deviation percentages for each weld parameter are set in the Teach Mode setting under Teach Mode of Configuration (section 6.9.2.6 Teach Mode). After completing the Teach process, the quality windows settings are saved, and you will no longer be in Teach Mode.

Figure 6.20 Standard Teach Mode

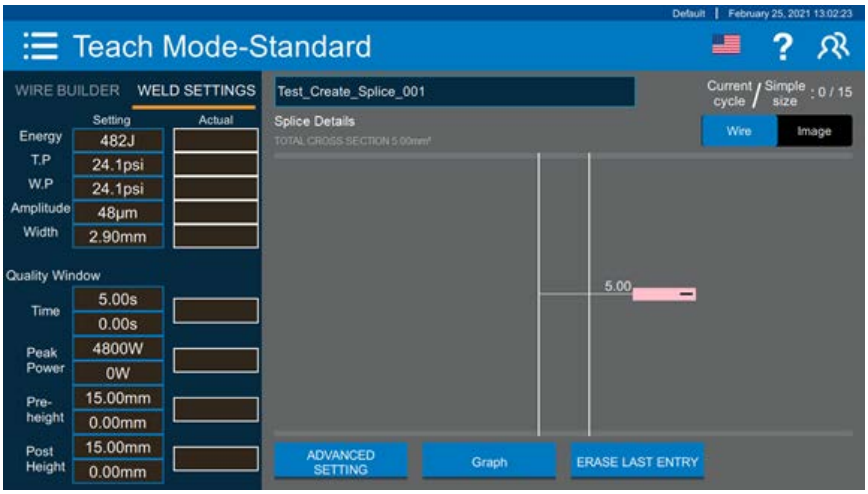

6.5.2.2 Auto Teach Mode

In the Auto Teach Mode you may not reject samples. If no changes are made to the Weld/Advanced settings, the previously saved quality windows are used for the first five splices, which form a basis.

Their averaged values for Time, Power, Pre-Height and Height, plus or minus ten percent tolerance, are used to evaluate the acceptability of the remaining samples. If one of the remaining samples falls outside of this range, it is rejected and an alarm occurs. Up to three splices may be rejected in a teach session. If a fourth bad splice is encountered the Auto Teach process starts over with wide open quality windows. The run quantity for Auto Teach Mode can be set under Teach Mode of Configuration (section 6.9.2.6 Teach Mode). When the Teach process is complete, the Splice and the quality window settings are saved. And the system will be in monitoring mode. While in monitoring mode you can do wire splices normally. The system will restart a complete Auto Teach session automatically if you change any of the weld parameters, quality windows settings, or recall a splice in operate screen.

Figure 6.21 Auto Teach Mode

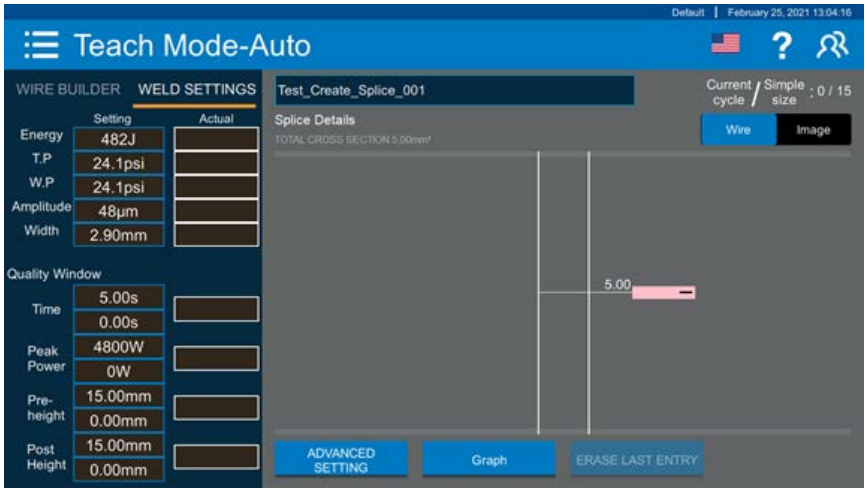

6.5.2.3 Sigma Teach Mode

The Sigma Teach mode collects data for the last 128 samples taken for each splice. It limits itself to the last 128 samples to keep data and statistics that will be meaningful to the current sample. The Sigma Teach mode calculates the average and standard deviation for each or the monitored parameters (Time, Power, Pre-height, and Height).

At 128 and later samples, the oldest data point on the left is removed and the latest data point is added at the right position. Average and standard deviation are always based on the latest data. Removed data has no influence on the calculations.

Standard deviation is calculated with an (n-1) weighting. This tends to make the smaller values of the n have wider standard deviations.

The collected data is displayed between the Upper Specification Limit (USL) and the Lower Specification Limit (LSL). These are the limits as shown on the screen. If there are more the 3 samples in the data a Gaussian curve is displayed. The Gaussian curve is positioned between the limits and as much of its data as possible is displayed. There are markers on the curve to show 1, 2, 3, 4, 5, standard deviations. The 1, 2, and 3 markers are vertical while the 4 and 5 are horizontal (see Figure below). The most desirable situation is narrow limits with a tight curve.

Figure 6.22 Sigma Markers

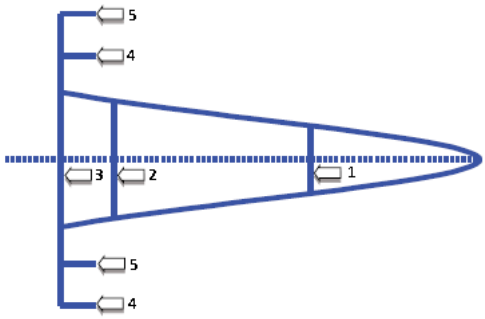

After completing the Teach process, the Splice and the quality windows settings are saved, and you will no longer be in Teach Mode.

Figure 6.23 Sigma Teach Mode

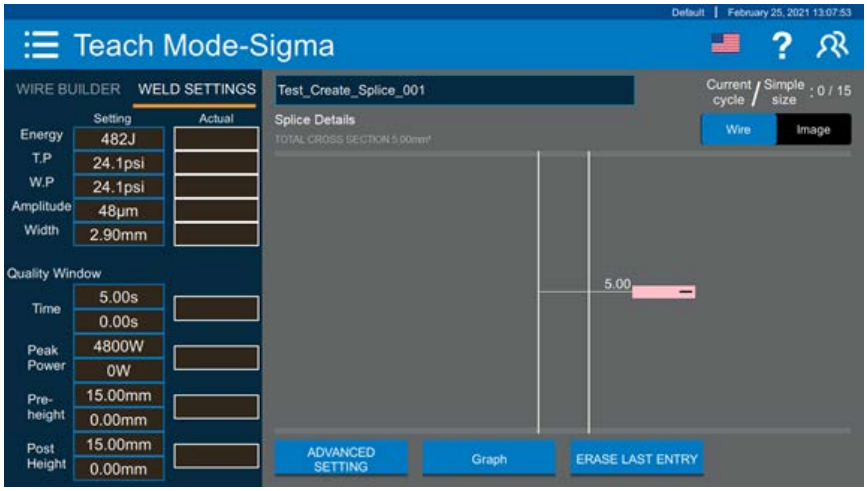

6.6 Operate Menu

6.6.1 Operate Splice

You can select a Splice from the splice library and specify the number of batch size you want to run the weld cycle. The Operate Splice List can be opened by pressing the shortcut key "F5" directly. When Need To Qualify is in OFF status, you will directly go to the Operate Splice screen. If Need To Qualify is in the ON status, the system will determine if the currently selected splice complete the teach process, if the Teach process is completed, you will go directly to the Operate Splice screen, if you do not complete the Teach process, you will first go to the Teach Mode screen and then to the Operate Splice screen.

Figure 6.24 Operate Splice

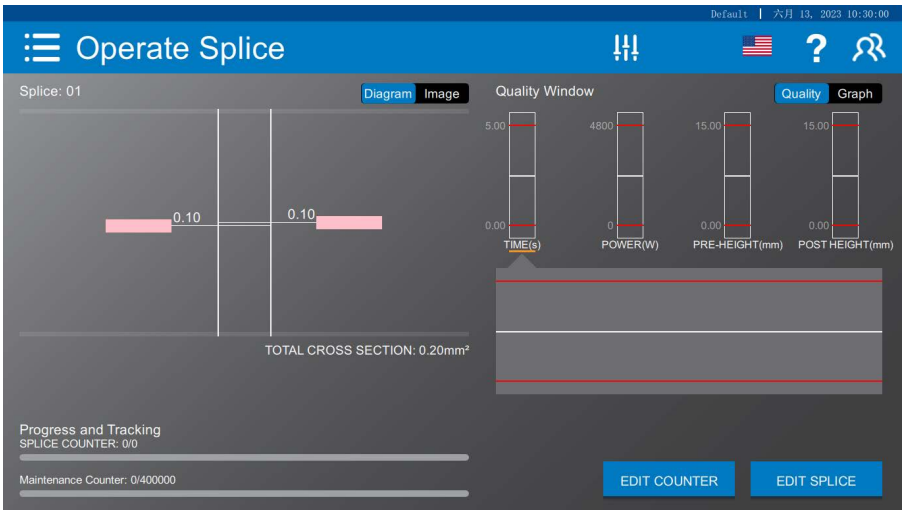

Displayed on the Top of the left section of the screen is the Splice name.

Displayed under the Wire map of the left section of the screen are the total area, Splice Counter and Maintenance Counter. In the right section of the screen are the Quality Window and weld trend graph that can be changed with Height & Power weld cycle Graph using switch button Quality/Graph.

Operate Splice screen can switch the splice through the bar code scanner. The splice to be switched should be generated the QR code and then be scanned by the bar code scanner. If the splice is searched, the splice will be switched on this screen, otherwise, a prompt message "No Part Found" will pop up.

6.6.2 Operate Sequence

You can select a Sequence from the sequence library to run the sequence on the Operate Mode.

When Need To Qualify is in OFF status, you will directly go to the Operate Sequence screen. If Need To Qualify is in the ON status, the system will determine if the currently selected sequence complete the teach process, if the Teach process is completed, you will go directly to the Operate Sequence screen, for the sequence that does not complete teach process after creation, it will first jump to the Teach Mode interface until all the sequences complete the teach process before jumping to the Operate Sequence screen.

You can switch the sequence through the bar code scanner on Operate Sequence screen. The sequence to be switched should generate the QR code and then scan the QR by the bar code scanner. If the sequence exists, the sequence shall be switched, otherwise, the prompt message "No Part found" will pop up.

Figure 6.25 Operate Sequence

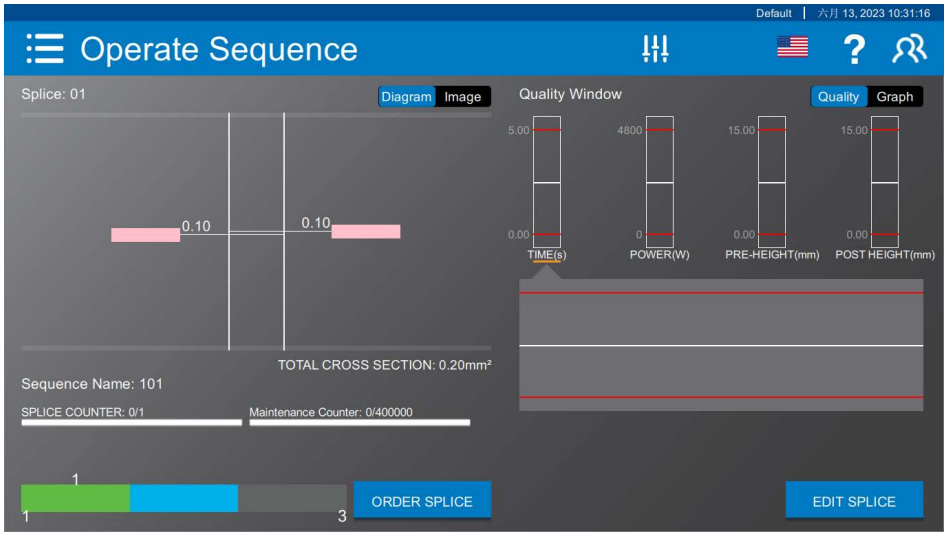

Displayed on the upper left section of the screen are the current step splice name and the detail information, the sequence name and the process of current splice are located on the bottom left.

Touching the ORDER SPLICE button will take you to go to the selected sequence.

6.6.3 Operate Harness

You can select the Harness you wanted from the harness library to run the harness on the operate mode.

Figure 6.26 Operate Harness

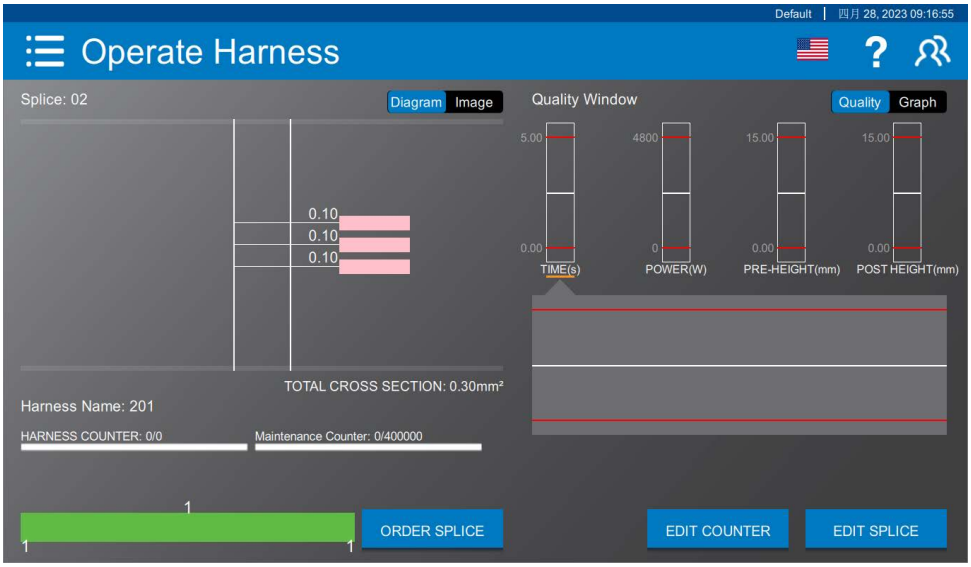

Displayed on the upper left section of the screen are the current step splice name and the detail information, the process of current harness are located on the bottom left. Current Harness name and Status are displayed on the bottom right of the screen.

Touching the ORDER SPLICE button will take you to the selected harness.

6.7 View Data Menu

Figure 6.27 View Data

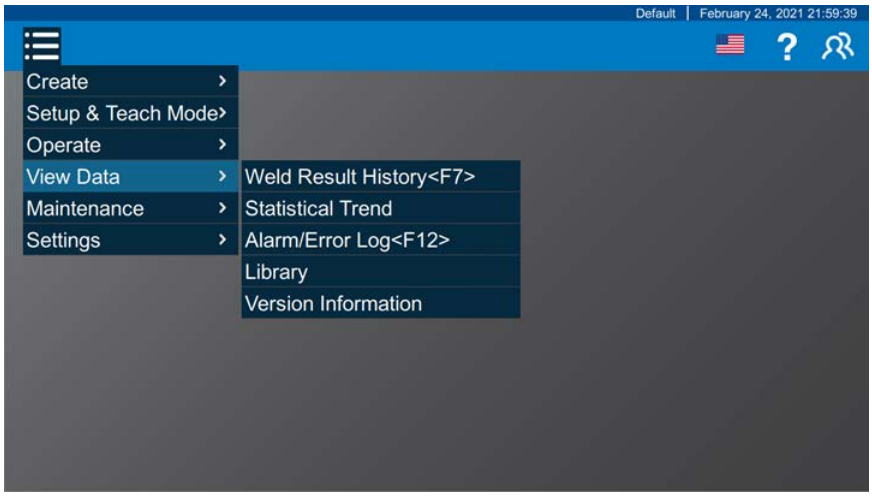

6.7.1 Weld Result History

Selecting the Weld Result History option will take you to Weld Result screen. Pressing the key "F7" can also be used to open the Weld Result screen. On the Weld Result screen, you can retrieve the weld results by Sequence Name, Harness Name, or Splice Name. You can search the weld result using a period of the specified time range as well.

The Export Data button is only for the records you searched to save as the .xml file. You can open the .xml file using Excel.

NOTICE	
	The Export Data button exports the data for the searched record as an .xml file. Use Excel to open the file.

Figure 6.28 Weld Result History

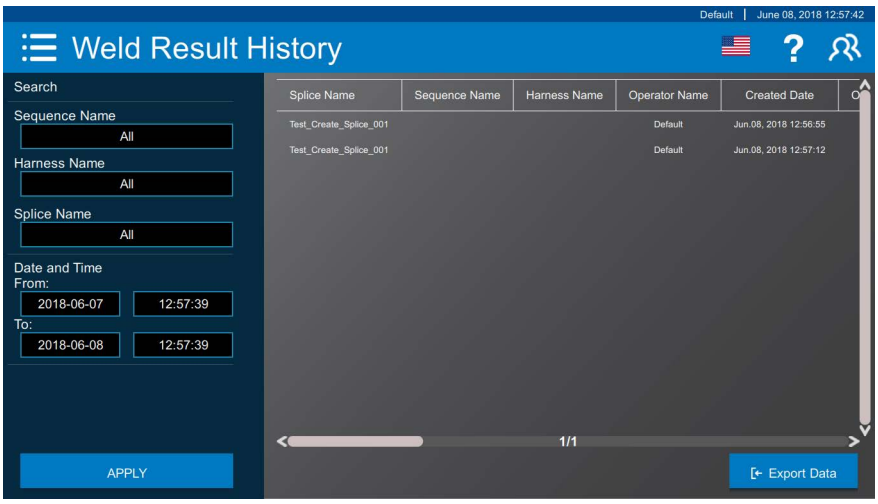

6.7.2 Statistical Trend

Touching the Statistical Trend option will take you to Statistical Trend Graph screen where you can search the specific splice weld result using Splice name and the time period.

Figure 6.29 Statistical Trend

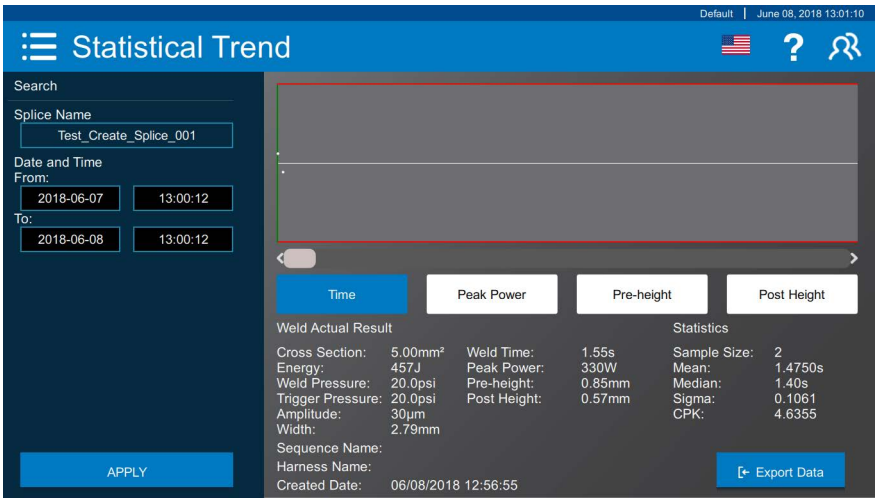

6.7.3 Alarm/Error Log

Touching the Alarm/Error Log option will take you to Alarm/Error log screen. Pressing the key "F12" can also be used to open the Alarm/Error Log screen directly. On this screen, you can retrieve the Alarm/Error information of you wanted using Alarm/Error type and the specific time period. The Alarm/ Error log shall catch the any alarm/Error caused during the system running regardless of the welding or idle.

Figure 6.30 Alarm/Error Log

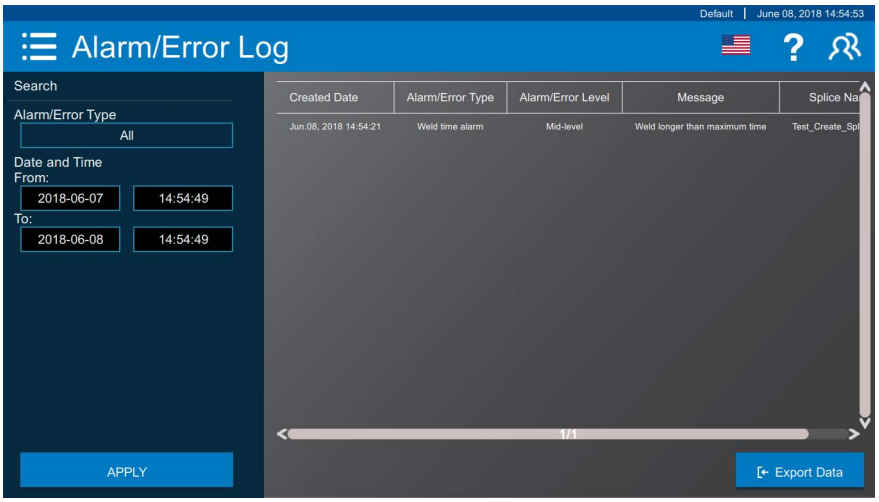

6.7.4 Library

Touching the Library option will take you to Library database screen where the system provides a unify interface to access Splice Library, Sequence Library, Harness Library, Wire Library and Insulation Library.

The Export Data button in Splice Library, Sequence Library, Harness Library, Wire Library and Insulation Library is only for the records of you selected from the list to save as the .xml file.

You can open .xml file using Excel.

The Export Data button in Library is used to export all the data in the library, and the Import Data button in Library is used to import data from other machines to this machine.

NOTICE	
	The Export Data button exports the data for the selected record as an .xml file. Use Excel to open the file. The folder to be exported/imported should be opened when export/import the database.

Figure 6.31 Library

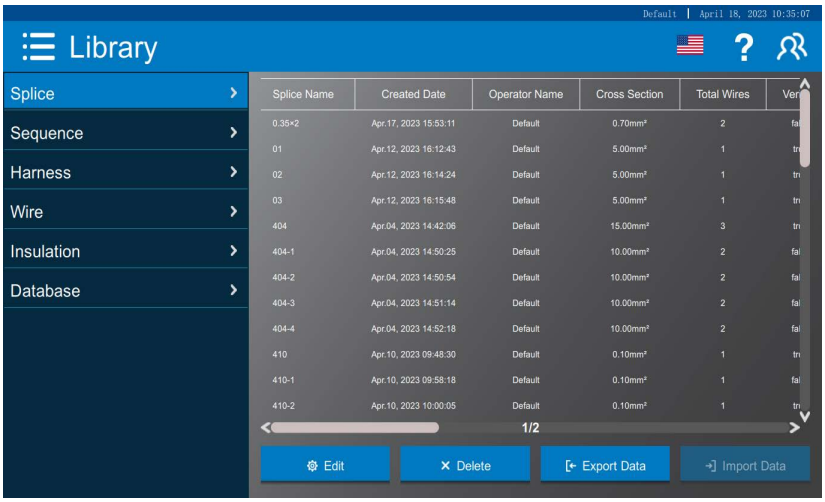

6.7.5 Version Information

System hardware and software information are displayed here.

Figure 6.32 Version Information

6.8 Maintenance Menu

Touching this menu will guide you to access the Maintenance screen where you can implement some maintenance activities on the system. The following submenus will help ensuring accurate operation and assuring long term operation of your equipment.

Figure 6.33 Maintenance Menu

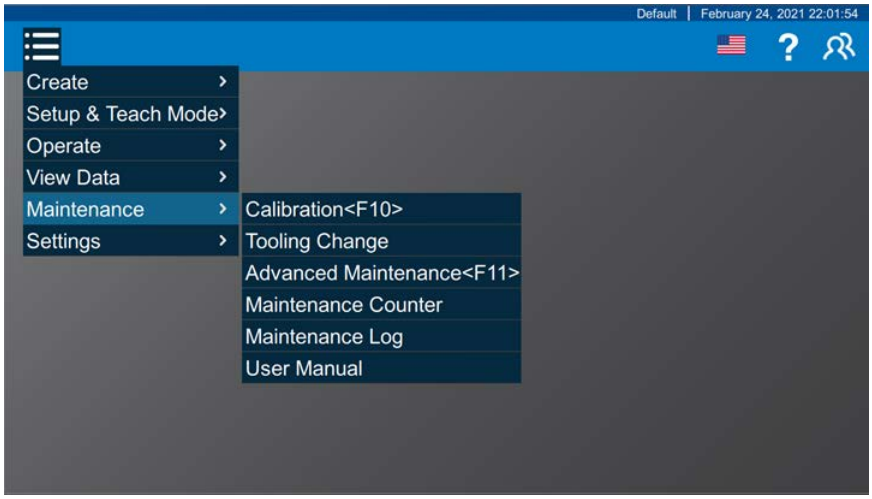

6.8.1 Calibration

Touching Calibration option will take you to the Calibration screen where the calibration process can be implemented on Width, Height and Amplitude respectively. You are only required to implement following the instructions on the screen. Pressing the key "F10" can also open the Calibration screen.

Figure 6.34 Calibration

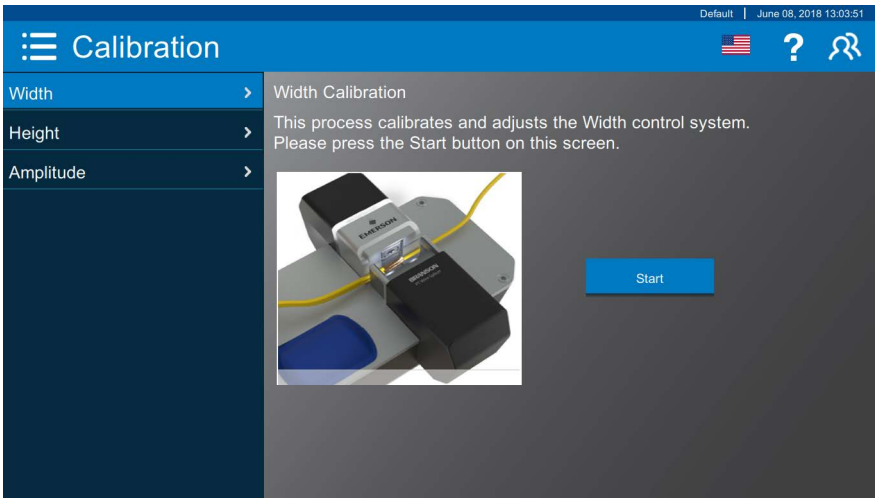

6.8.2 Tooling Change

Touching Tooling Change option will take you to the Tooling Change screen where you can change the tooling for different use or maintenance. You can be guided following the instructions on the screen. (Non-professionals are not allowed to operate).

Figure 6.35 Tooling Change

6.8.3 Advanced Maintenance

Touching Advanced Maintenance or pressing the key "F11" directly can take you to the Advanced Maintenance screen. On this screen you can get all the maintenance features of the system. This is a live screen means data of this screen will be updated in real-time. You can touch the buttons on the left side to test all the mechanical components.

The Sonics and Power Test can be performed while the control button touching on the right side of the screen.

Figure 6.36 Advanced Maintenance

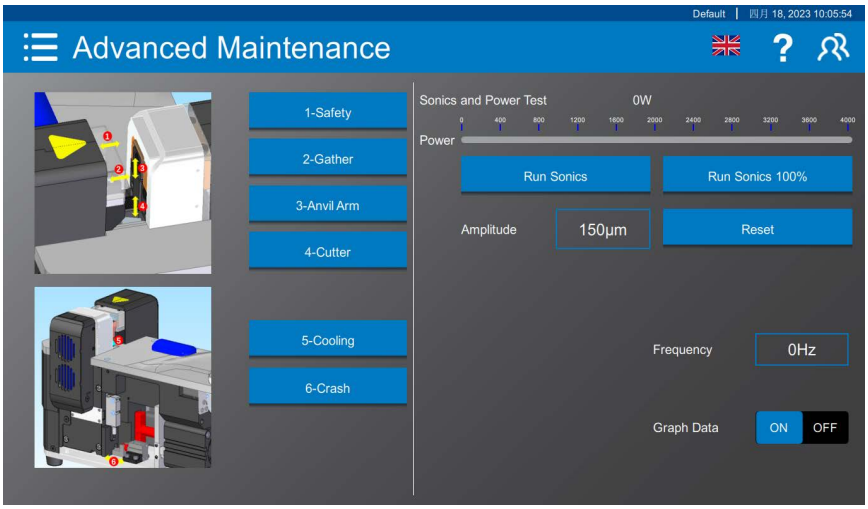

6.8.4 Maintenance Counter

Touching the Maintenance Counter option will take you to Maintenance Counter Screen where you can get the record of usage counter and accumulated energy of all the mechanical components such as: Horn, Anvil, Gather, Guide and System. You also can set each mechanical components life cycle on counter and energy. If some mechanical components is ordered by yourself on the 80% alarm or 100% lock options, the prompted message can popup on screen and alert you to replace components with new one.

Figure 6.37 Maintenance Counter

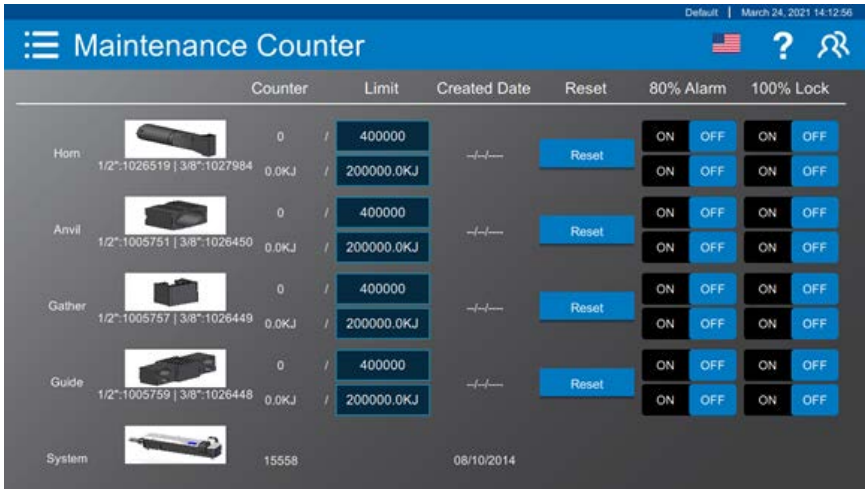

6.8.5 Maintenance Log

Touching the maintenance log option will take you to the Maintenance log screen where you are able to retrieve the history maintenance activities you want using the maintenance type and the specific time period.

Figure 6.38 Maintenance Log

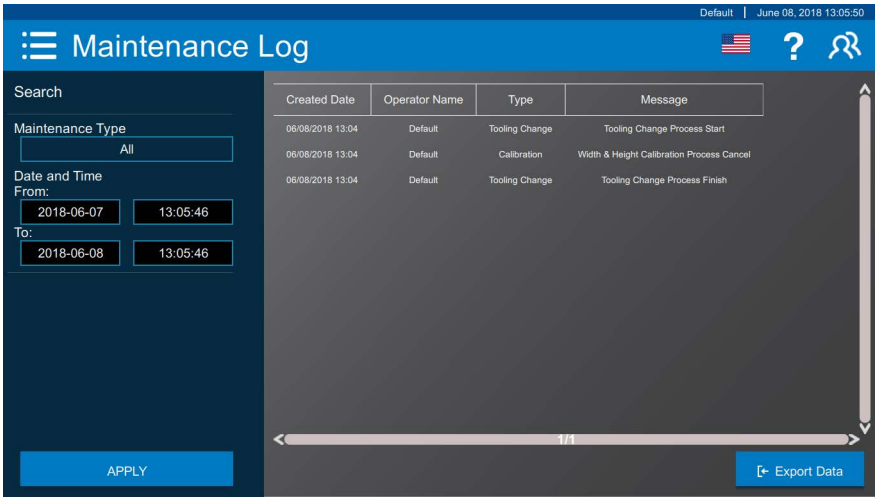

6.8.6 User Manual

Touching User Manual option will guide you to the User Manual screen where you can get the entire user manual on the GMX-W1 product.

Figure 6.39 User Manual

6.9 Settings Menu

6.9.1 Permission Setting

Touch Permission Setting option will take you to the Permission Setting screen where you can set the function permissions for the different level user.

There are 4 default levels: Operator, Technical, Supervisor, Executive. the Operator level is the lowest level, and Executive level is the highest level. The access permission for each level is:

Operator shall access the “Operate Splice”, “Operate Sequence”, “Operate Harness”, “Maintenance Log”, “Weld Result History”, “Statistical Trend”, “Alarm/Error Log”, “Version Information” directly without any key required.

In addition to operator permission, technician shall access “Test”, “Teach Mode”, “Calibration”, “Advanced Maintenance”, “Maintenance Counter”, “Weld Settings”, “Quality Window” directly without any key required.

In addition to technician permission, supervisor shall access “Create Splice”, “Create Sequence”, “Create Harness”, “Edit Splice”, “Edit Sequence”, “Edit Harness”, “Tooling Change”, “Configuration”, “Data Communication”, “Lock On Alarm” directly without any key required.

Executive shall have the highest permission for all the screens and functionalities accessing.

Figure 6.40 Permission Setting Screen

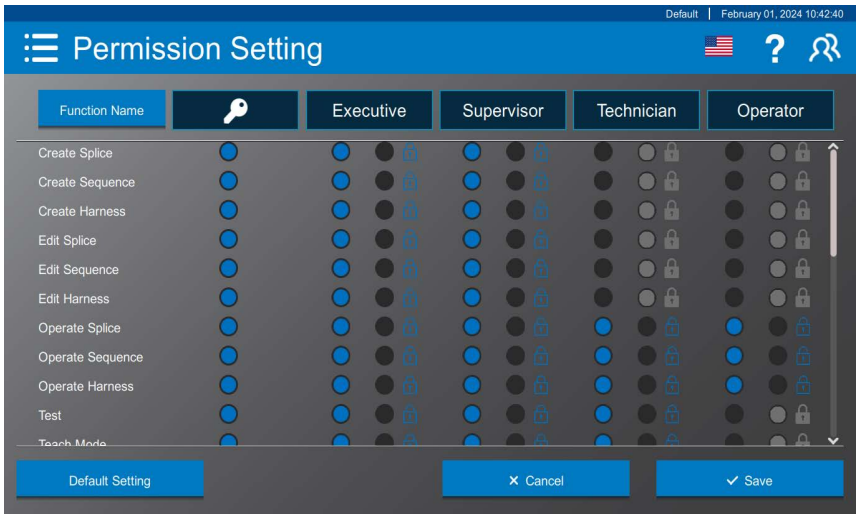

As the Permission Setting screen shown, there are 2 columns in each level. The first column is called “Master Key” and it’s the indicator to identify the related specific function. The second column added LOCK is the sign that is the current function has been protected on some specific user, the user can access it until the proper key of he owned.

The setting rule for these 2 columns are:

If the first key “Master Key” is not checked, the option lock should be disabled with gray color.

If the role for a screen is also not checked, the option lock should be gray and cannot be checked.

If “Master Key” and the role are checked, the option lock shall be available for setting.

Figure 6.41 Permission Prompt Message

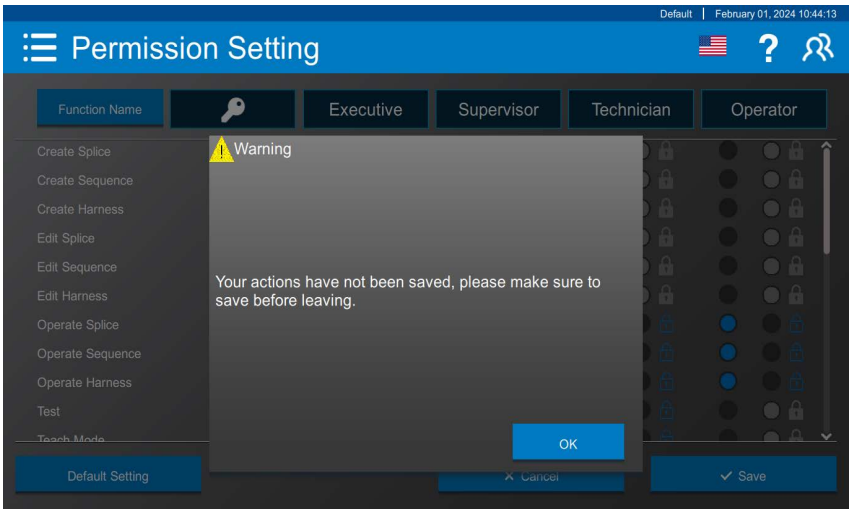

If the setting is changed and not be saved, a message box "Your actions have not been saved, please make sure to save before leaving." will pop up to remind you to save changes. Clicking "OK" Button shall stay on this screen.

6.9.1.1 Key Switch

There is the physical key switch located at the right side of the front panel. You will be asked to insert the key when you want to access a screen or function that has been restricted by the physical key from the permission settings menu.

Figure 6.42 Key Switch Restricted Screen

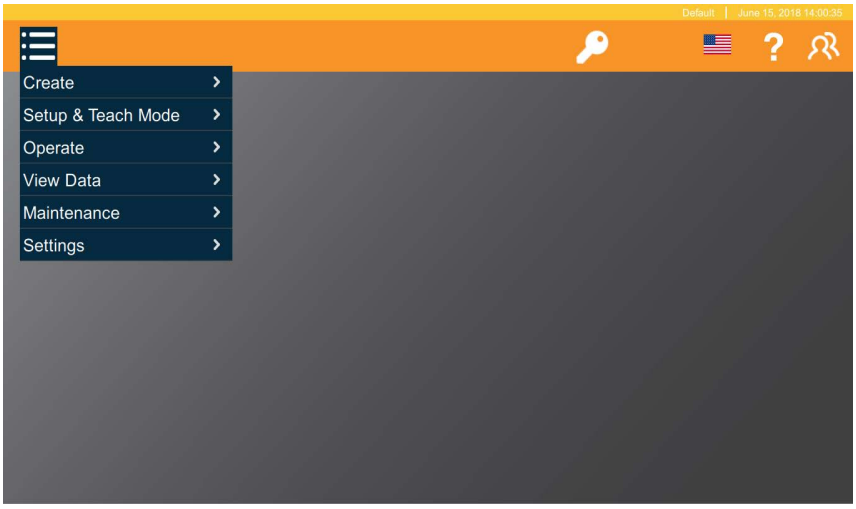

6.9.2 Configuration

Touching Configuration option or pressing the key "F8" will take you to the configuration screen where you can change the following settings to configure your GMX-W1 system. All the settings as following shown are the global setting that will affect the entire system.

Figure 6.43 Configuration

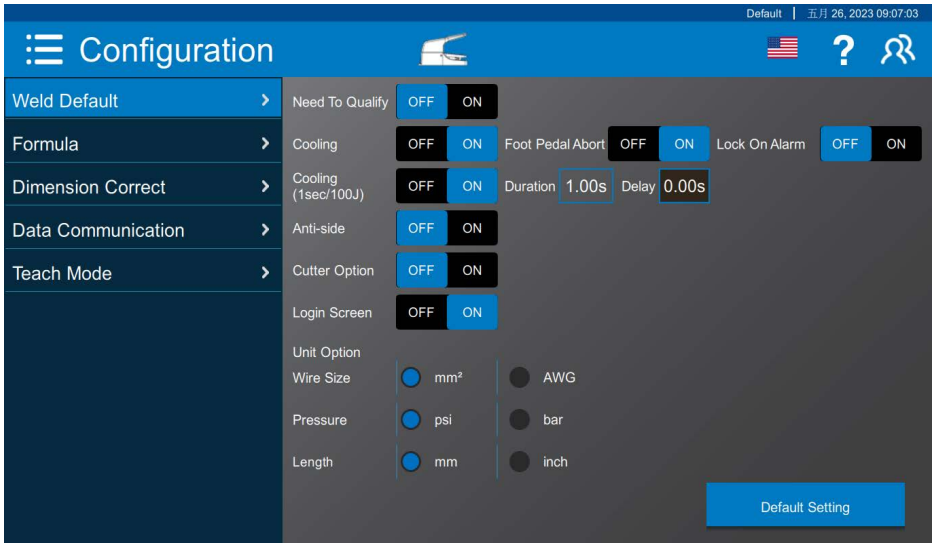

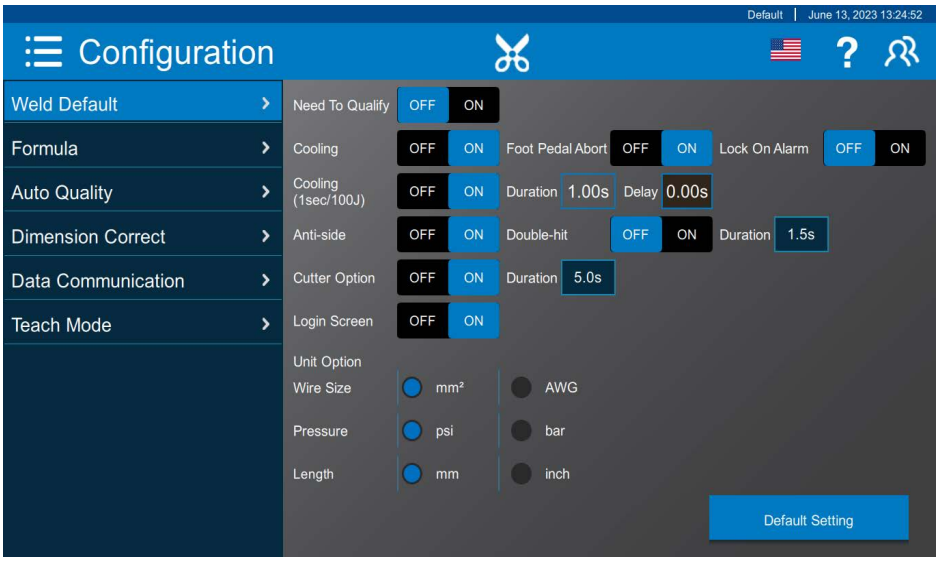

6.9.2.1 Weld Default

Settings will affect the splice and the welding work flow.

6.9.2.2 Formula

Touching Formula option will take you to Formula Screen where you can edit the offset and multiplier for 4 different splice area ranges. When a splice is created, the system enters recommended weld settings based on the total area of the splice. The set offsets and multipliers are used for calculating a recommended Energy, Width, Pressure and Amplitude as shown below:

- Energy = Offset + (Cross Section X Multiplier)
- Width = Sqrt (Cross Section) X Multiplier
- Pressure = Offset + (Cross Section X Multiplier)
- Amplitude = Offset + (Cross Section X Multiplier)
- Time = Offset + (Cross Section X Multiplier)
- Peak Power = Offset + (Cross Section X Multiplier)
- Pre-Height = Offset + (sqrt(Cross Section) X Multiplier)
- Post Height = Offset + (sqrt(Cross Section) X Multiplier)

NOTICE	
	When the Total Area of a splice is changed the controller will recalculate the weld settings using the above formulas.

Figure 6.44 Formula

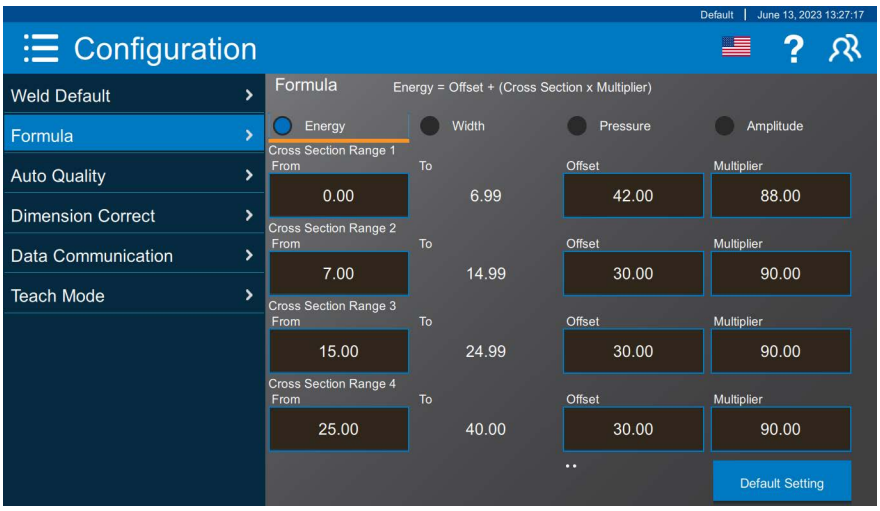

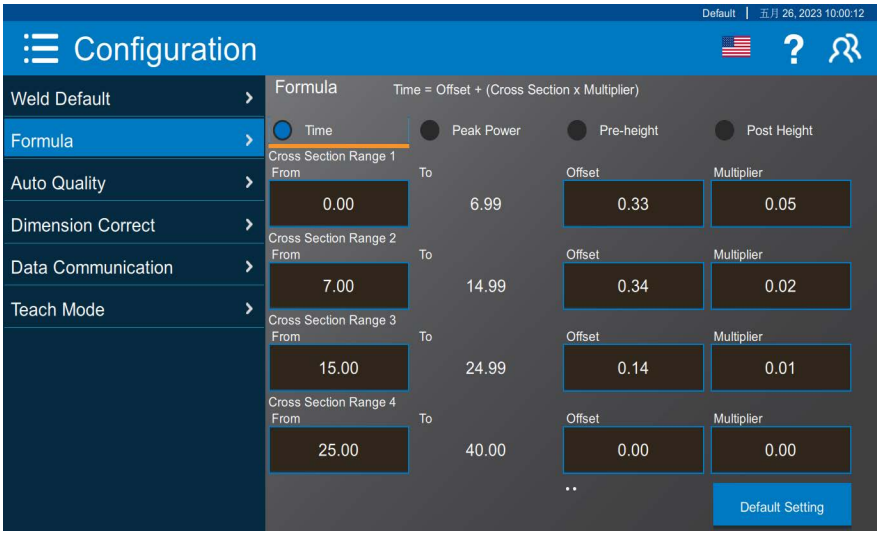

6.9.2.3 Auto Quality

Click the "Auto Quality" option to enter the "Auto Quality Setting" screen, in which the user can activate the quality setting option to set the upper and lower limits of time, peak power, pre–height and post-height, and the "Status" button is used to activate one or more limits.

Figure 6.45 Auto Quality

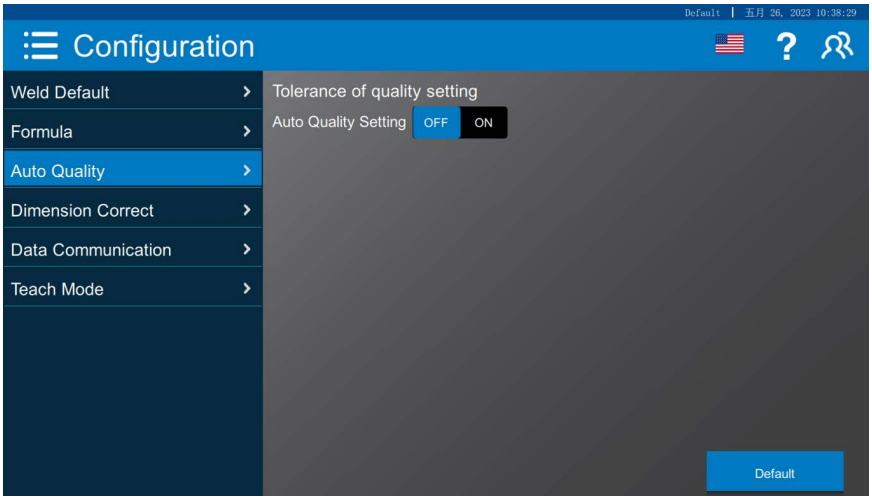

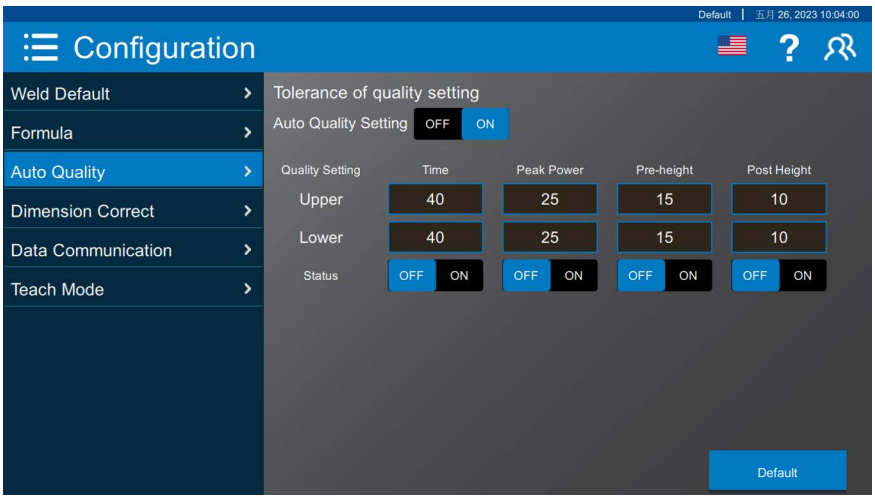

6.9.2.4 Dimension Correct

Touching Dimension Correct option will take you to the dimension correct screen where you can Activate Correction option to compensate a little bit gap between the setting value and the measured value both on width and height so you can get the more accurate weld result compared with your setting.

Figure 6.46 Dimension Correct

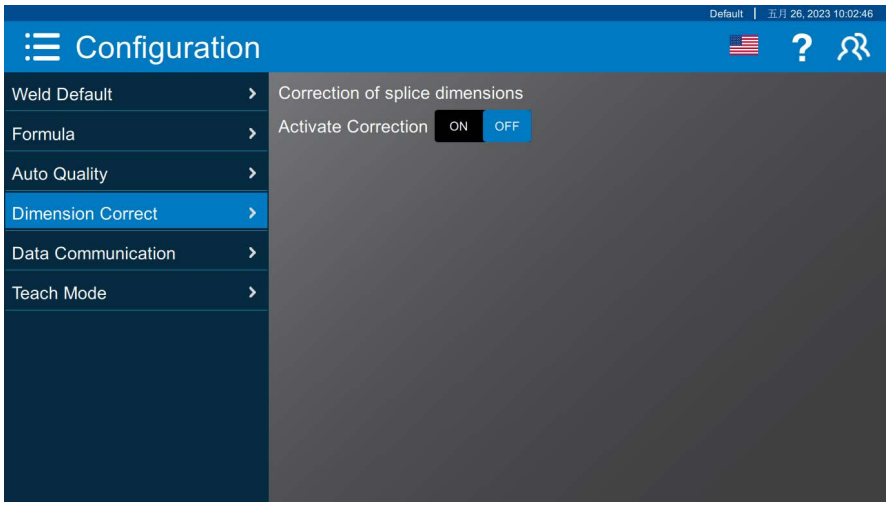

Figure 6.47 Dimension Correct Options

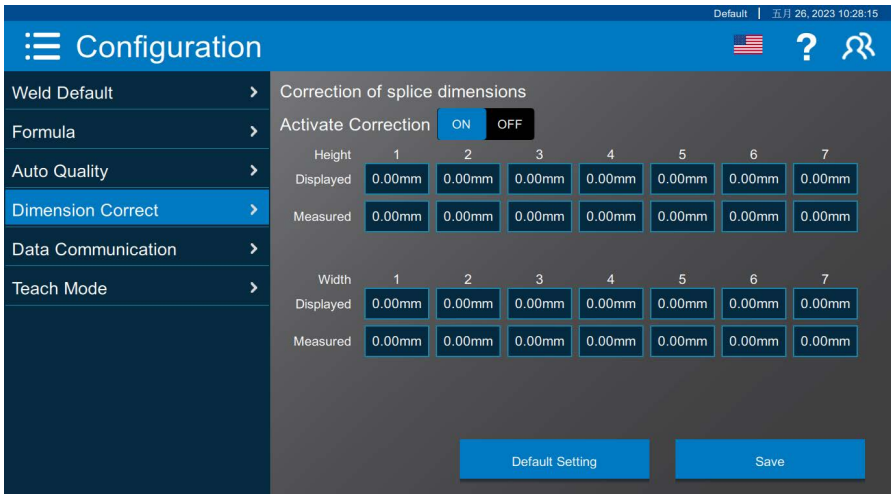

In order to get the more precise value during the weld cycle, the system needs to find the linear relationship between the Displayed and the Measured values that both need to be typed by the operator manually as the above screenshot showing both on Height and Width sections. It means there are two points of the displayed value and measured value picked up at least for the linear relationship building.

Regarding width value compensation, there are two ways it can be implemented on the welding actual welding application as follows…

One is the one-time setting solution on the full width setting range at the first beginning machine setup. Operator can select 7 points from the system full width range with some welding test for the width data sampling, for example, the operator can build some new splices with 1mm, 2mm, 3mm, 4mm, 5mm, 6mm and 7mm width setting to run weld cycle respectively and record the welding display value and weld nugget measured value for these 7 points then. Once the operator gets the values both on display and measured from the previous weld cycles, he can go back to the Dimension Correct screen to set the width compensation using the recorded samples.

Another solution is case-by-case for the specific application. If the operator wants to get the more precise width value on a specific application that would be the negligible tiny gap between the display value and the measured value, he should have the estimation both on the upper limit and

lower limit of the width setting on his specific application and pick up the 7 points from the range between the upper limit and lower limit to configure the Dimension Correct width setting.

Regarding the height value compensation, the way is only available for the case-by-case solution rather than the system full height range. The reason is that the zero position of the system defined is the variability under the different pressure setting due to the physical mechanical deformation, so the operator can set the Height Value setting on the Dimension Correct screen using the case-by-case compensation solution that should be same as the width compensation of the above description.

6.9.2.5 Data Communication

Touching Data Communication option will take you to the communication configuration screen where you can test the communication status when a shrink tuber machine needs to work together with your GMX-W1. If you want to get the weld result from Ethernet after each weld cycle finished, you can enable Network (Ethernet) and Remote Data Logging options to subscribe the function Regarding the Modular Production Mode option, you can implement the KSK system using this option. Once the option is enabled, the system will read Database from the share folder where the server also can access this folder from the database edit using Ethernet.

Figure 6.48 Data Communication

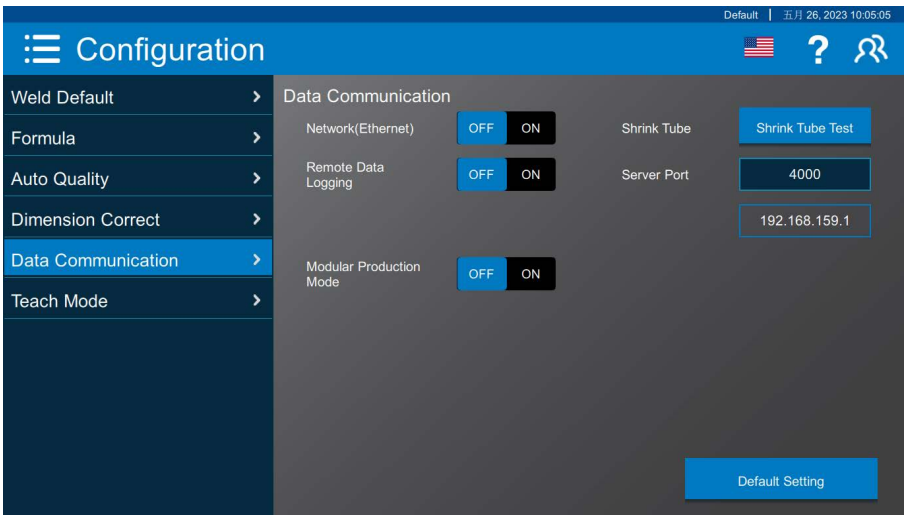

6.9.2.6 Teach Mode

On the Teach Mode tab you may select the teach mode the software you will use. There are three different teach modes available: Standard, Auto and Sigma. On this tab you can set the run quantity and allowable deviation percentages for the Standard or Auto teach modes. See section 6.5.2 Teach Mode for more information.

Figure 6.49 Teach Mode

6.9.3 Operator Library

Touching the Operator Library option or pressing the key "F9" will take you to operator library database screen where the system provides a unify interface for user management. You will be conferred the authority to Add/Edit/Delete the users account for the user management.

Figure 6.50 Operator Library

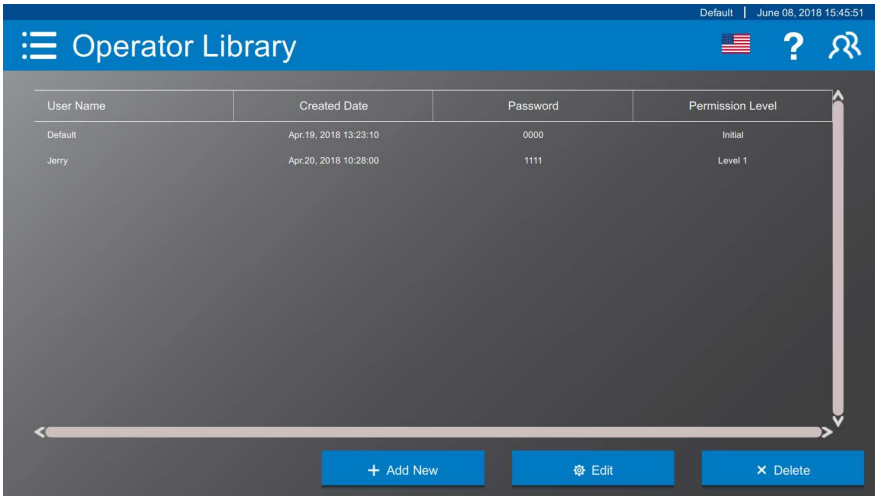

6.10 Test the Welding System

After the welding system is installed, you can confirm that the ultrasonic welding system is operational by following this test procedure using a sample part.

Step 1: Select Create Splice from the Create Menu.

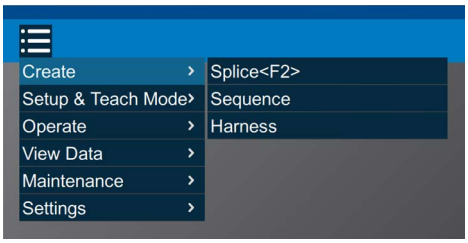

Step 2: Touch the input box Splice Name. (An alphanumeric keyboard will pop up.) Input the splice name.

Step 3: Touch +ADD WIRE button to add necessary wires for current splice.

Step 4: Tap the wire you want to edit. Wire properties can be changed from the WIRE BUILDER Panel on the left side of the screen.

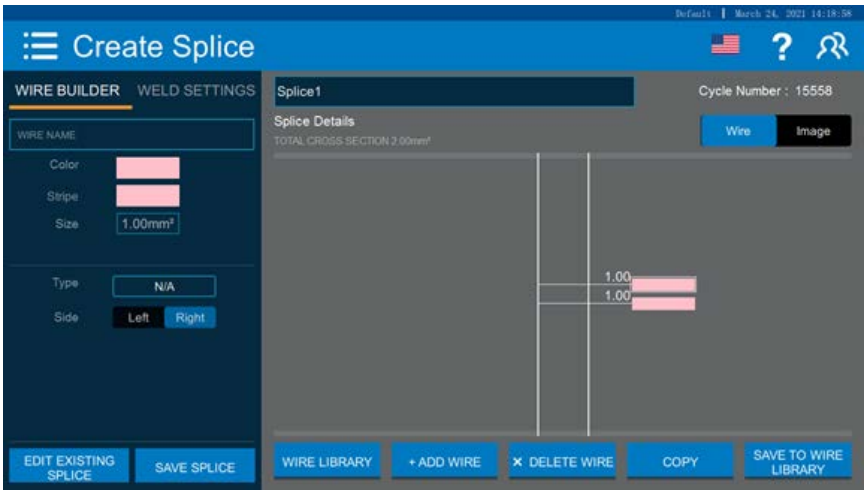

Step 5: Repeat Step 4 for all wires in the splice.

Step 6: Tap the WELD SETTINGS to set the weld settings for current splice.

(The software has generated a recommended weld setting based on the total area of the splice)

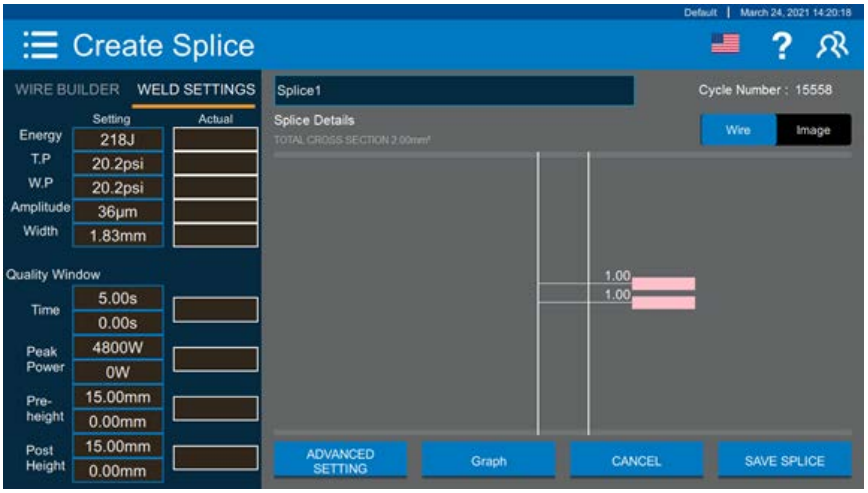

Step 7: Implement the weld for several times, and you can fine-tune the weld settings based on 6.11 Establishing Weld Parameters.

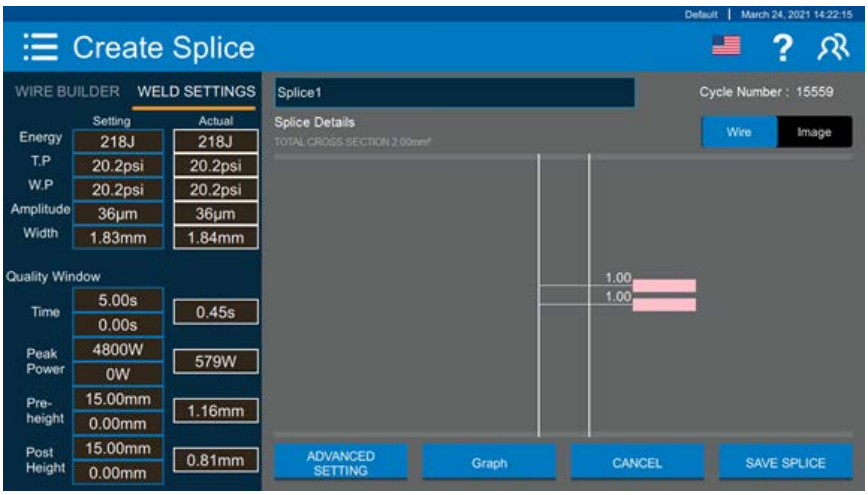

Step 8: When finished tap the SAVE SPLICE button to save the splice to system library.

Step 9: An information box should pop up on the screen that indicates if the action was successful or not.

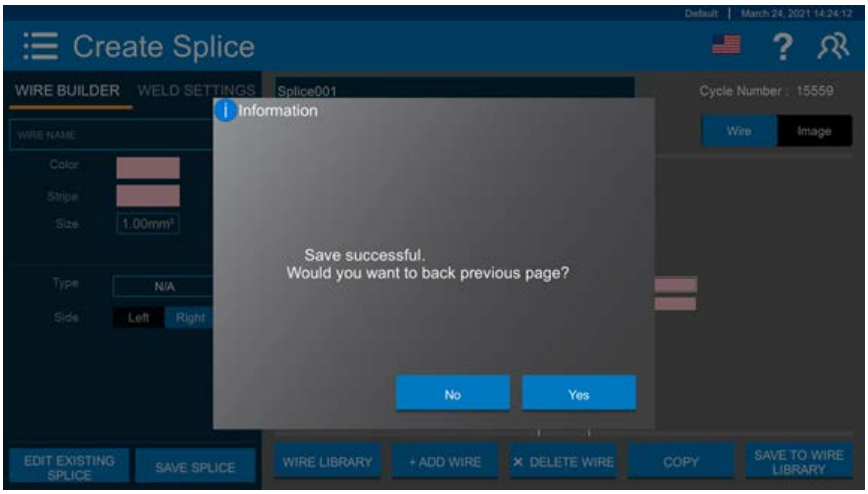

6.11 Establishing Weld Parameters

After you have properly installed the system and have a comprehensive understanding of the information in welding system manuals, you may safely operate the GMX-W1 system.

Splice parameters for your application may have already been developed at Branson and stored in the controller's non-volatile memory. Refer to Parameter Preset Information located in the Special Information Instruction Set.

In the event parameters must be developed, the following is a step by step process for doing so. Included are suggestions and photographs of actual wire splices. The photographs illustrate the progression of poor splices from under welded to over welded ending with a representation of the perfect splice that will give excellent process capability (Cpk) values when destructively tested. Guidance is also provided for the proper procedure for destructive testing. To develop a splice, proceed as follows:

1. From the controller, enter the below parameters that will make up the desired splice:

- Energy (Joules)
- Weld Pressure, Pressure During Sonics (psi)
- Amplitude (microns)
- Splice Width (mm)

2. Place the wires into the target area of the splicer using the horn, anvil tip and anvil tip guide as a locator. It is recommended that larger wires be closest to the horn (Figure 6.51) when there is a significant difference in wire sizes being spliced. The reason for this is that the larger wire takes more energy to weld each of its strands to its neighbor. With the orientation reversed, there is a possibility the smaller wire could be damaged or over welded before the larger wire was welded. It is also recommended that wires be placed on top of one another as much as possible to ensure good welding from wire to wire and to avoid the possibility of a "side splice".

Figure 6.51 Proper Wire Insertion

Strip Length	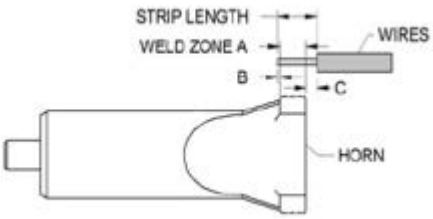	A=13mm for 1/2" Tooling Package A=10mm for 3/8" Tooling Package B≤1mm 3mm≤C≤6mm The recommended strip length is 17~20mm.
Placement in welding zone	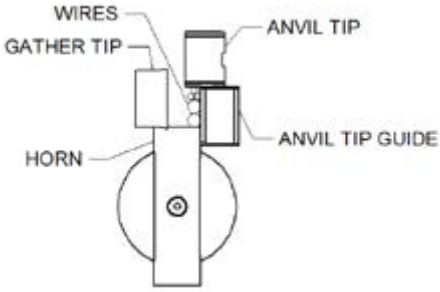	Care should be taken to stack the wires vertically wherever possible to ensure an optimum splice.

3. Activate the splicer and make a splice.
4. Examine the splice and refer to the wire splice comparisons in Table 6.2. Based upon observation make adjustments as follows:

- If you see loose strands (Ref. C) increase the welding pressure in 10% increments as you make additional splices. If after increasing the welding pressure by 20% there are still loose strands then increase the

amplitude by 10%. Continue to follow this sequence until the splice looks good with no loose or broken strands (Ref. H)

- If you see broken strands or flash (Ref. D) reduce the amplitude by 10% and make a splice. If the splice is still over welded, reduce the welding energy by 10% and make another splice. If the splice is still over welded, reduce the welding pressure by 10%. Continue to follow this sequence until the splice looks good with no broken strands or flash

6.11.1 Evaluation of Splice

A splice must withstand vibration, moisture, high current loads, heat, and cold. Extensive studies have shown that the ability to meet these requirements is directly related to the pull strength of the wire splice. Peel strength is also important. A minimum level of resistance to peel must be associated with each splice to allow handling of wire harnesses during manufacturing and installation without an adverse effect on the splice. Peel strength does not however relate directly to the ability to meet the aforementioned requirements. For instance, over welding or extruding a wire splice will increase peel strength while decreasing the pull strength and therefore the ability of the splice to perform satisfactorily.

Table 6.2 Evaluation of Splice

Ref.	Condition	Schematic	Description
A	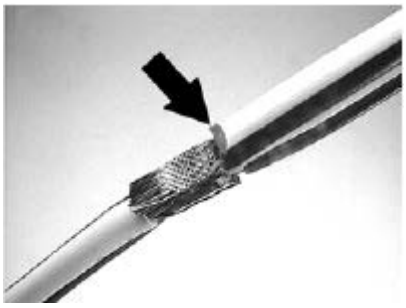	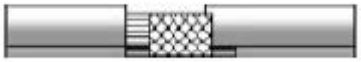	**Wire Overlap** Damaged or burnt insulation
B	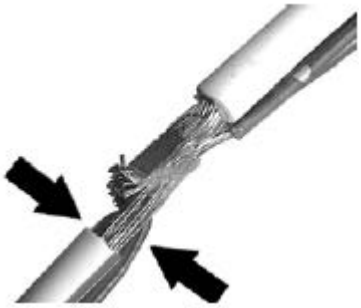		**Over Welded** Wire not fully inserted into weld pocket
C	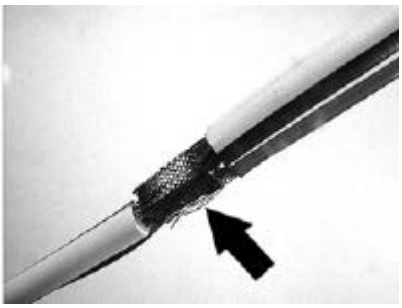		**Under Welder** Pressure too low

Table 6.2 Evaluation of Splice

Ref.	Condition	Schematic	Description
D	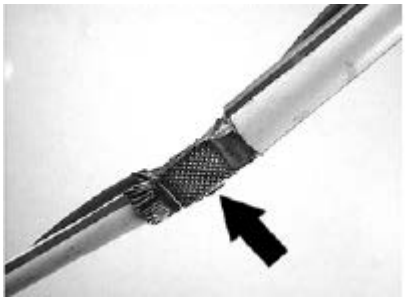		**Over Welded** Pressure and amplitude too high (flash & burning)
E	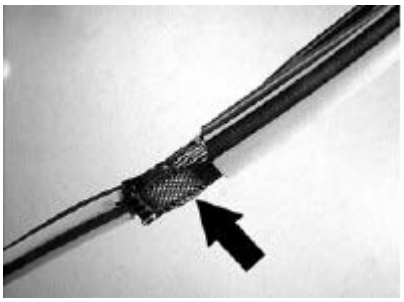	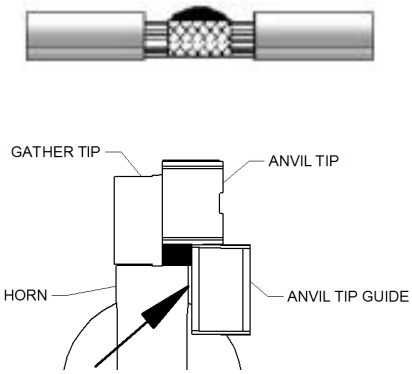	**Flash** Anvil tip guide gap too big
F	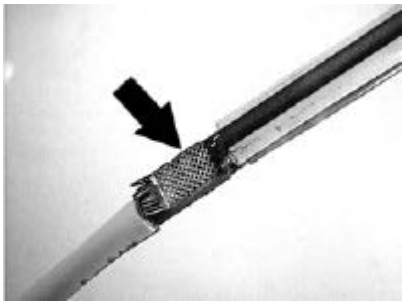	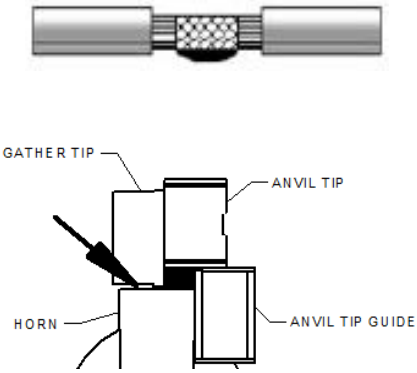	**Flash** Gather tip gap too big

Table 6.2 Evaluation of Splice

Ref.	Condition	Schematic	Description
G	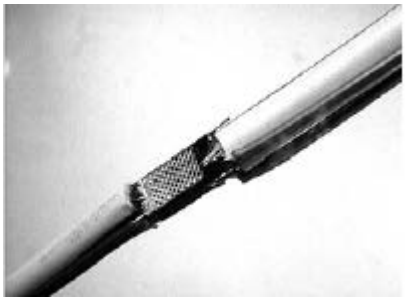	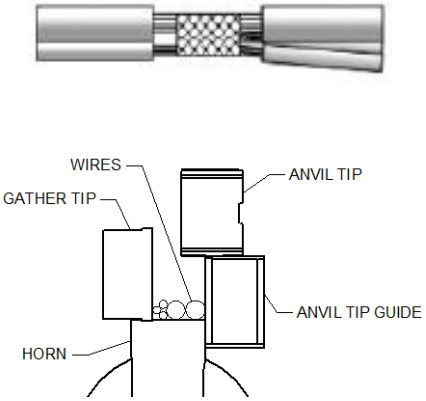	**Side Splice** Incorrect wire stacking in weld pocket
H			**Good Splice**

6.11.2 Destructive Testing

When the splice appears good as result of following the above instructions, evaluate samples using destructive testing. Pull test the splice according to recommended pull test technique. Fixturing of the splice for tensile testing is very important. Care must be taken to ensure no twisting of the nugget occurs. Testing should be on the smallest diameter wire and/or the wire closest to the anvil. The reason for this is that the anvil side of the nugget has received the least amount of ultrasonic energy and should be the weakest part. If this wire meets the tensile strength specification then it is safe to assume the splice is good. Wherever possible, it is a good idea to use multiple wires to anchor the test specimen and ensure an even pull on the wire being tested. If the splice meets specifications for strength make a minimum of 10 splices, pull test them and calculate the Cpk. If the Cpk is not satisfactory, examine the splice carefully to determine how it is failing. An under welded splice will fail by separating at the weld. An over welded splice will fail at the transition point of welded to un-welded wire. Based upon your observation return to the prior instructions and repeat the optimization process. Note that the best splices will fail at the transition but will do so at a consistent and predictable force. It is therefore necessary to pick weld parameters that meet this condition without excessive deformation of the wire strands.

Pull test values must meet the required value established by your customer for the smallest gage wire in the splice. In addition, the following conditions have always been cause for rejection:

- Broken strands
- One or more loose strands
- Excessively burnt insulation
- Excessively frayed ends
- Failed torsion (twist) test

6.11.3 Quality Monitoring

The system, through its controller is capable of monitoring four welding variables during each cycle. The weld time (s), peak weld power (watts), component (s) pre-height (mm), and component (s) post-weld height (mm). Each variable can be set with upper and lower limits. When a limit or limits are violated, an audible alarm sounds. The type of alarm and associated value are displayed on the monitor. Quality limits are the responsibility of the end user. It is recommended that these limits be calculated using statistical methods.

Figure 6.52 Quality Monitoring

6.11.4 Compaction vs. Tensile Strength

Knowing that pull (tensile) strength directly relates to the ability of the splice to meet performance criteria the question becomes, "How is tensile strength maximized?" Studies at Branson on a range of wires in a 2 X 2 splice configuration clearly show that maximum tensile strength is achieved when the wires are welded and compacted to a dimension, which is 20% greater than their solid copper cross section, (Figure 6.53).

Figure 6.53 Percent Compaction vs. Tensile Strength

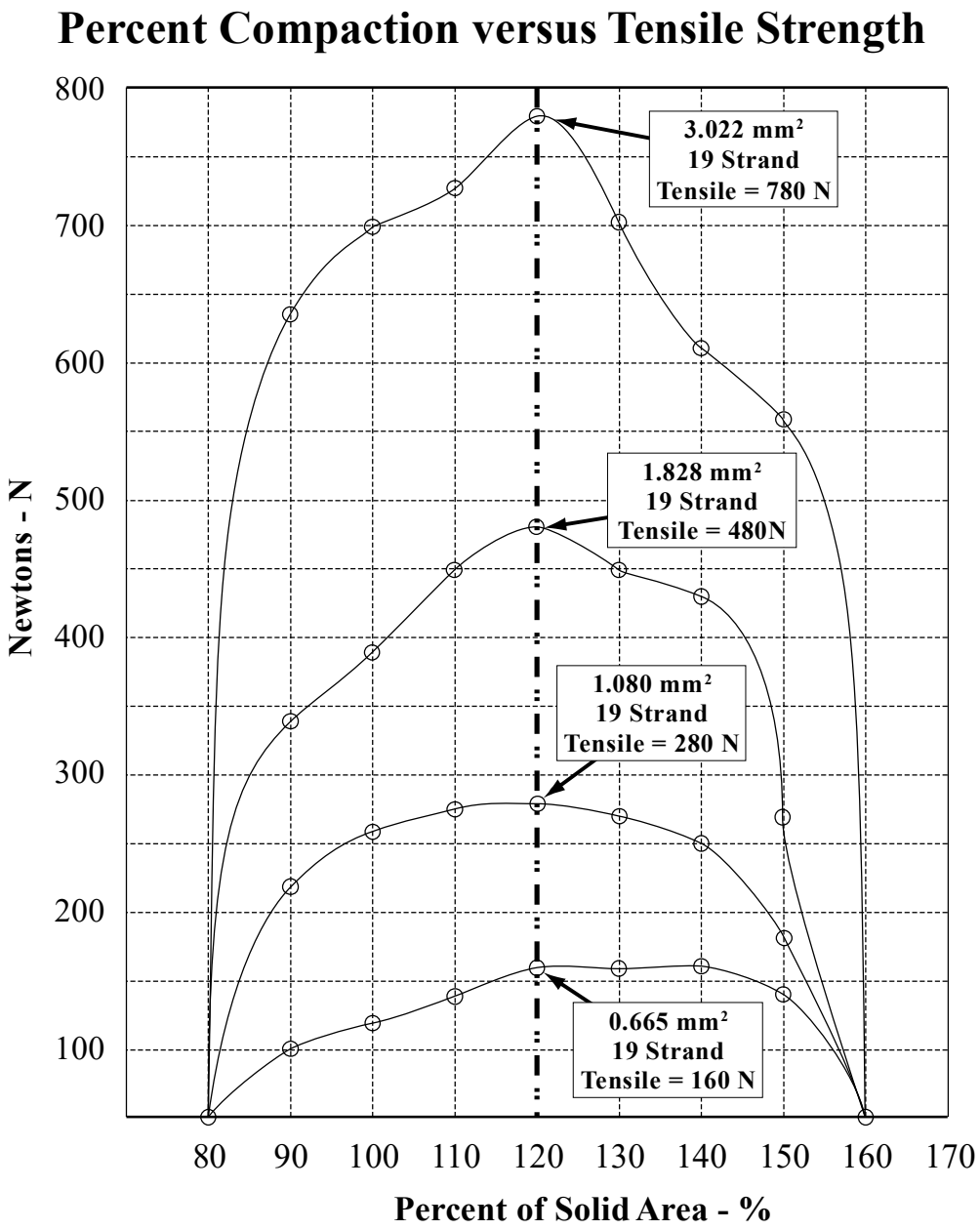

6.12 How to build the communication with laptop

6.12.1 Configuration

This section discusses building a communication between GMX-W1 and a laptop using an Ethernet cable. Once the communication is built successfully, the weld data will be sent from the machine after each weld cycle finished.

You need to keep the network cable always connected between the GMX-W1 and laptop.

6.12.2 Disable FBWF

Table 6.3 Disable FBWF (Apply to Windows 7 systems)

Step	Description
1	If the HMI software screen shows up on the screen after power up, please close HMI software firstly.
2	Go to FBWF Manager from the Start menu.
3	• Select "C:" disk in the drop-down menu of the Volume section • Uncheck "Enable" option • Check if the "Protected" option is disabled following "Enable" option status change 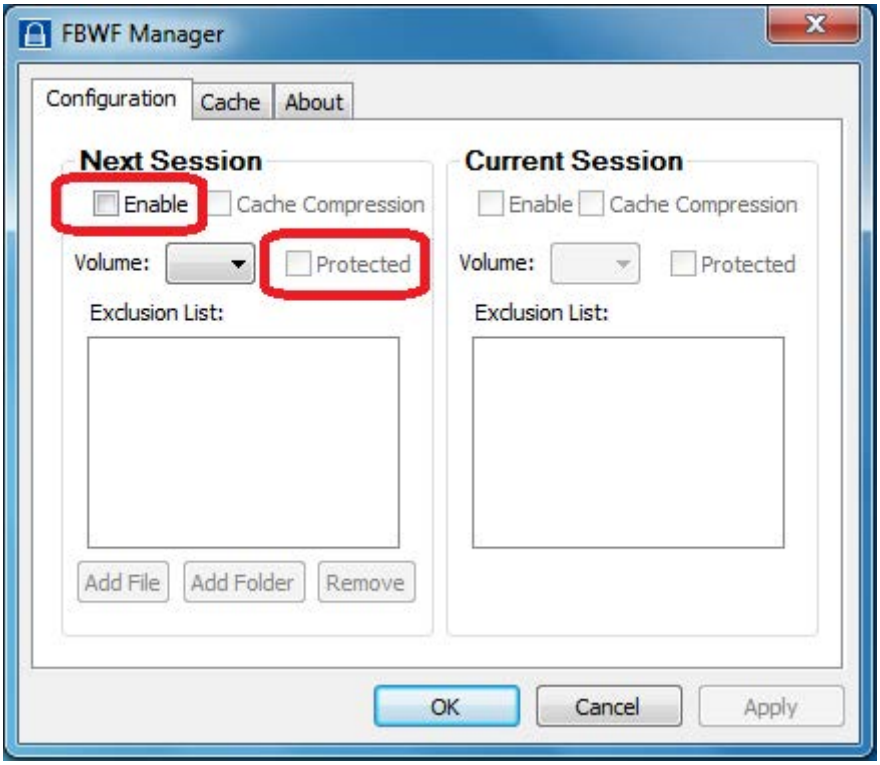
4	Apply changes.
5	"Do you want to apply your changes?" > Yes.
6	"You must reboot for changes to take effect, do you want to reboot now?" > Yes.

Table 6.4 Disable UWF (Apply to Windows 10 systems)

Step	Description
1	If the HMI software screen shows up on the screen after power up, please close HMI software firstly.
2	Double-click the desktop Lock.exe software, enter username: Branson, password: 0000, and click the Disable button. 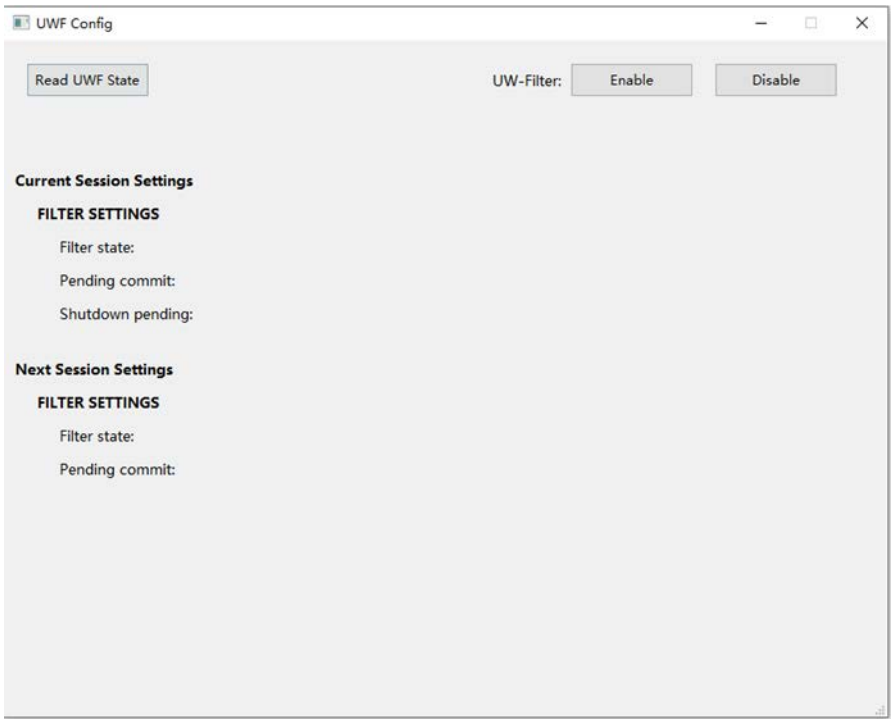
3	Follow the prompts to restart the device.

If FBWF or UWF functions are not turned off when modifying IP or upgrading software, unpredictable errors will occur.

6.12.3 Set IP address on the Windows 7 OS of the GMX-W1

Table 6.5 Set IP address

Step	Description
1	Click the Network status sign on the right bottom of the screen.
2	Open Network and Sharing Center > Change adapter settings.
3	Double click Local Area Connection 2 > Properties.
4	Double click Internet Protocol Version 4 (TCP/IPv4).
5	Set IP address and subnet mask as • IP: 192.168.1.111 • Subnet Mask: 255.255.255.0
6	Click OK to save the settings and close all the screens.

6.12.4 Windows Firewall settings on the Windows 7 OS of the GMX-W1

Table 6.6 Firewall settings

Step	Description
1	Control Panel > Windows Firewall > Turn Windows Firewall On or Off.
2	Disable all the Firewall options. 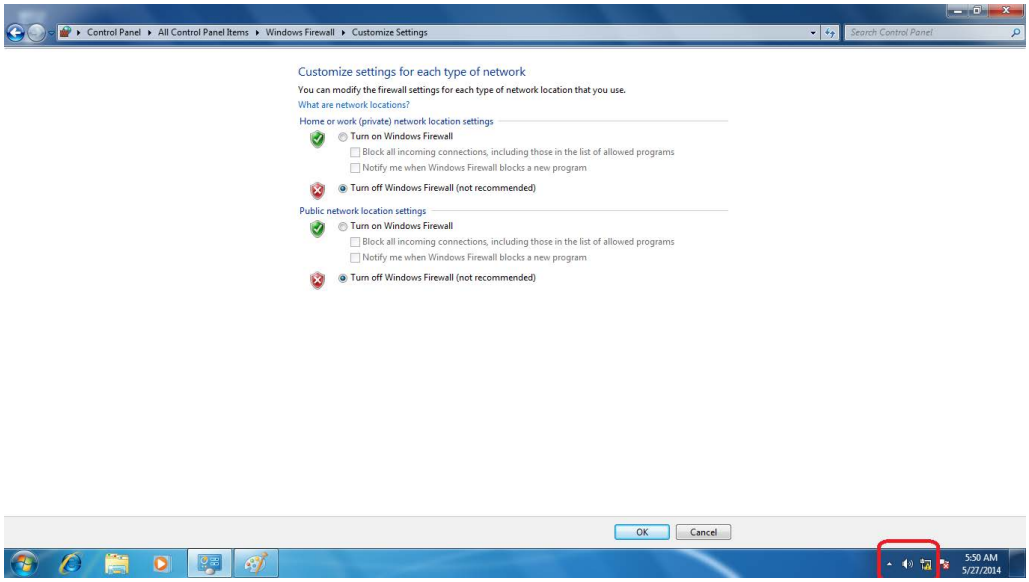
3	Click OK to save the settings and close all the screens.

6.12.5 Set IP address on Windows 10 OS of the laptop

Table 6.7 Set IP address

Step	Description
1	Click the Network status sign on the right bottom of the screen.
2	Network & Internet settings > Ethernet > Change adapter settings.
3	Double click Ethernet 7 > Properties.
4	Double click Internet Protocol Version 4 (TCP/IPv4).
5	Set IP address and subnet mask as • IP: 192.168.1.38 • Subnet Mask: 255.255.255.0
6	Click OK to save the settings and close all the screens.

6.12.6 Local network testing

Table 6.8 Local network testing

Step	Description
1	Open Command Prompt using CMD on the laptop.
2	Type the command "ping 192.168.1.111" to verify if there is any response from GMX-W1. 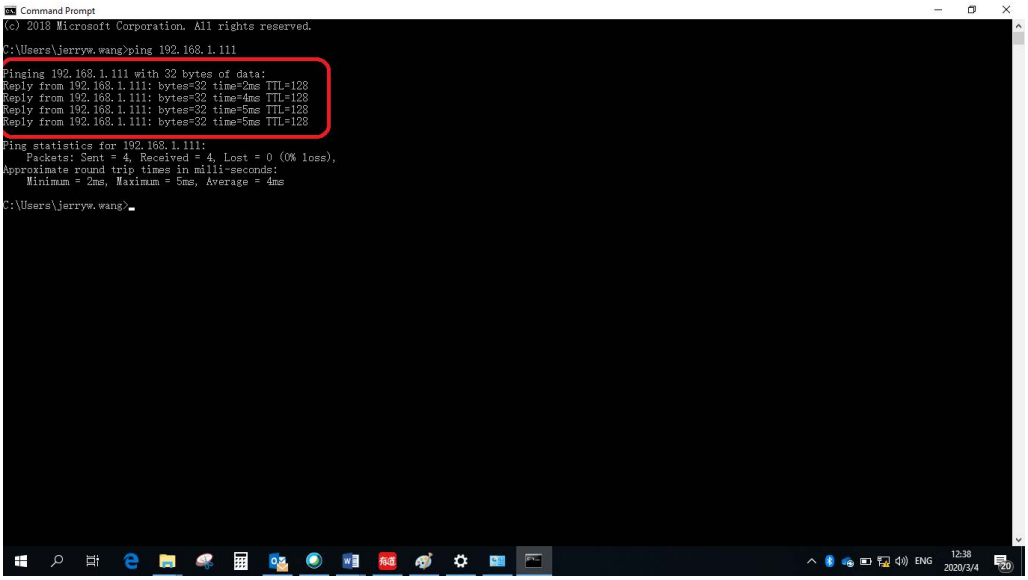
3	Repeat steps to verify on the GMX as well.

6.12.7 Data communication configuration

The data will be related to the weld result sending so some configuration for the data sending needs to be set on the HMI software.

6.12.8 HMI software configuration

Table 6.9 HMI software configuration

Step	Description
1	Open HMI software > Settings > Configuration.
2	Data Communication.
3	• Verify the IP address should be 192.168.1.111 • Enable Network (Ethernet) option • Enable Remote Data Logging option 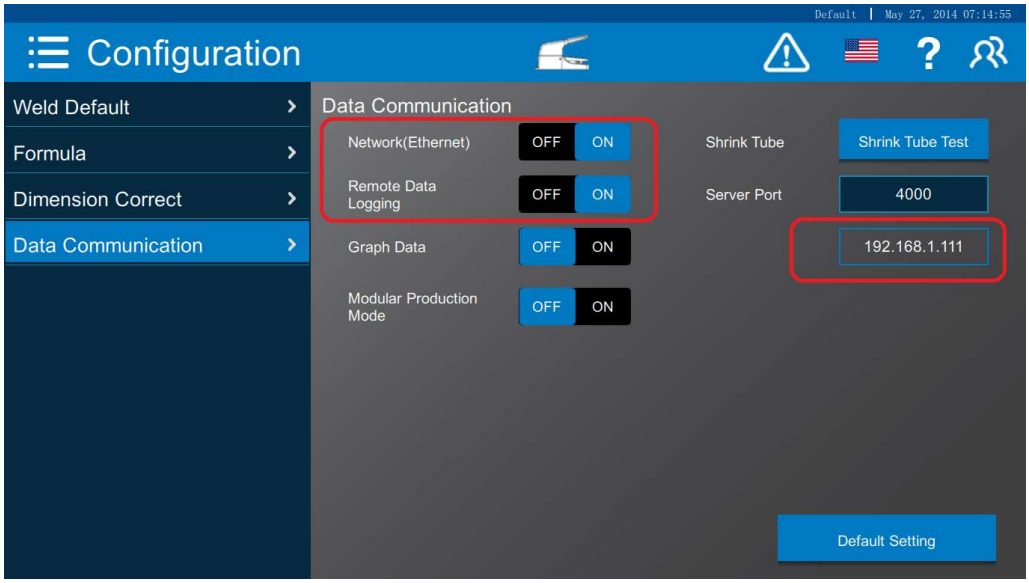

6.12.9 Socket TCP/IP testing

Table 6.10 HMI software configuration

Step	Description
1	Open TCP/IP testing tool Tera Term on laptop and setting as the socket client. 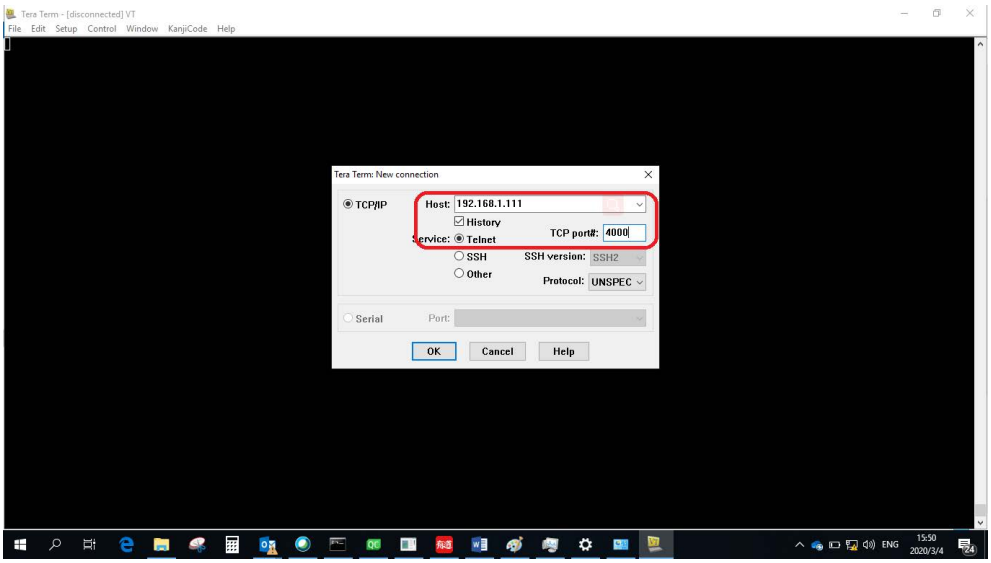
2	Connect to the GMX-W1 using the 192.168.1.111 as the server IP and 4000 as the port.
3	Click OK button.
4	Once the connection is successful, the weld result header can be received on the screen of the TCP/IP testing tool Tera Term. 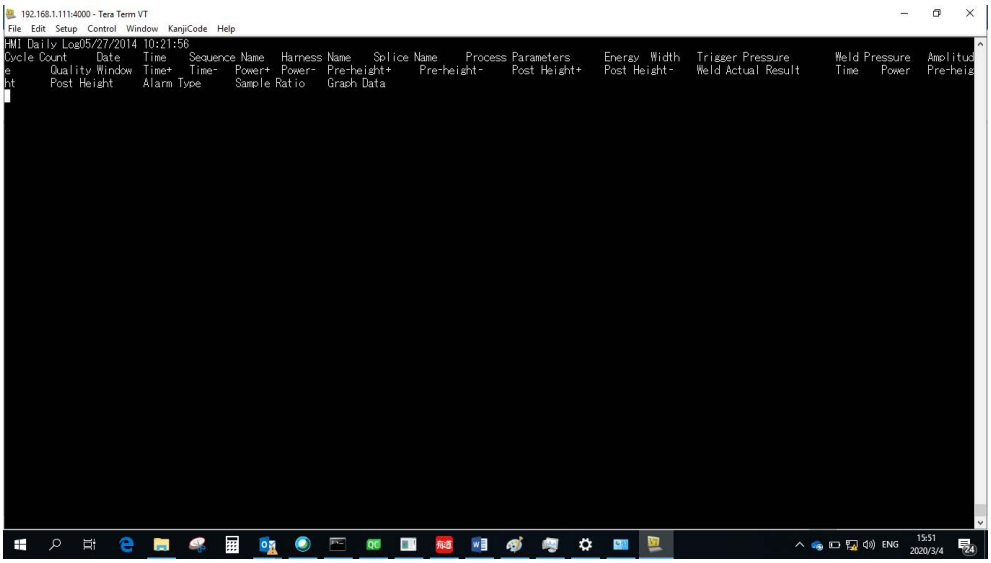
5	Go back to the weld screen and run a cycle.
6	The weld result data shall be received on the screen of the TCP/IP testing tool after each weld cycle completed.

Chapter 7: Maintenance

7.1 Controller Maintenance 116
7.2 Actuator Maintenance. 118
7.3 Tools 157
7.4 Troubleshooting 158
7.5 Parts List. 162

7.1 Controller Maintenance

The following preventive measures help assure long term operation of your GMX-W1 system.

WARNING	
	• All system components must be disconnected from the main electrical supply • Use LOTO (Lock Out Tag Out) lockable plug cover over line cord plug during any maintenance • Disconnect the air hose from the main air supply • Before you begin to disassemble any parts of the controller, ensure that it is turned off, and the main power is disconnected. Wait at least two minutes to allow capacitors to discharge.

WARNING	High Voltage Hazard
	High voltage is present in the controller. Do not operate with the cover removed. High line voltages exist in the ultrasonic controller module. Common points are tied to circuit reference, not chassis ground. Therefore, use only non-grounded, battery-powered multimeters when testing these modules. Using other types of test equipment can present a shock hazard.

7.1.1 Periodically Clean the Equipment

Air is continuously drawn into the GMX-W1 controller. Periodically disconnect the unit from power, remove the cover and vacuum out any accumulated dust and debris. Remove material adhering to the fan blades and motor, transistors, heat sinks, transformers, circuit boards, cooling intake vents, and exhaust ports. Filters can be added to the controller cooling fans for dusty environments. External covers may be cleaned with a damp sponge or cloth using a solution of mild soap and water. Do not allow cleaning solution to enter the unit. To prevent rust in areas of high humidity, exposed steel surfaces, such as handles, hardware, and the main column may require a very light film of oil, such as WD-40®*.

*WD-40 is a registered trademark of WD-40 Manufacturing Company Corporation.

7.1.2 Routine Component Replacement

The lifetime of certain parts is based on the number of cycles the unit has completed, or on hours of operation, e.g., at 20,000 hours, cooling fans should be replaced.

7.1.3 Parts Replacement

CAUTION	
	If a particular module has failed, it should be replaced or repaired at an Branson Depot Facility.

WARNING	
	The GMX-W1 controller contains components that can be degraded or damaged by electrostatic discharge. Always use a grounded wrist-strap and use a grounded work area when handling or servicing the system.

The GMX-W1 controller is designed for a long service life. In the event the system malfunctions, many of the internal components (Modules) are replaceable as a unit.

Controller Cover

The cover is held in place with seven screws, three on each side of the case and one on the rear. Lift the rear of the cover up to remove it. The cover must be in place when the system is operating due to fan-forced ventilation design.

7.2 Actuator Maintenance

In order to maintain optimum operating conditions, it is important to perform various maintenance and equipment inspections according to the actual status of actuator.

WARNING	
	• Any maintenance done on actuator shall be done only by properly trained and qualified personnel • If safety devices were removed prior to starting maintenance work, be sure to re-install those devices after finishing the maintenance work

7.2.1 Gather Tip Maintenance

Gather tip maintenance is needed if the following problems arise:

- Gather Count 80% Alarm
- Gather Energy 80% Alarm
- Gather Count 100% Lock
- Gather Energy 100% Lock
- Too small gap between Gather Tip and Horn, which may lead to impact or overload
- Too big gap between Gather Tip and Horn, which may lead to a flash
- Severe surface wear or corrosion

Table 7.1 Gather Tip Maintenance

Action	Reference	Tools
Step 1 Power off controller.	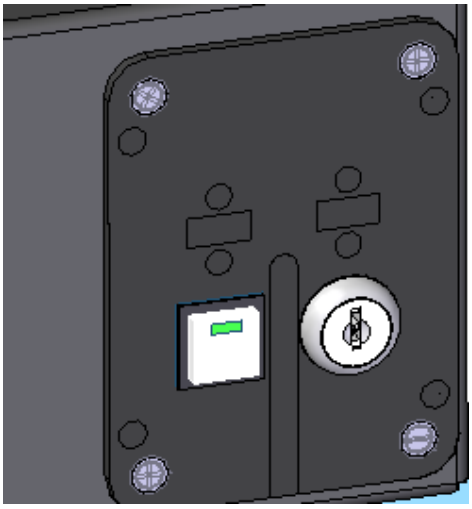	

Table 7.1 Gather Tip Maintenance

Action	Reference	Tools
Step 2 Remove the two M4 screws and gather cover.	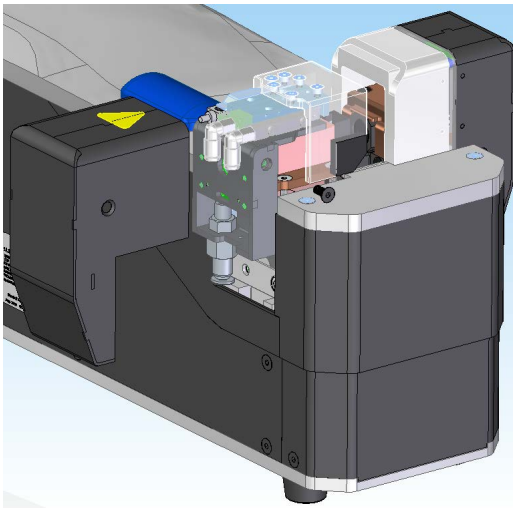	2.5mm hex wrench (EDP: 211-658)
Step 3 Remove the two M3 screws and safety guard cover.	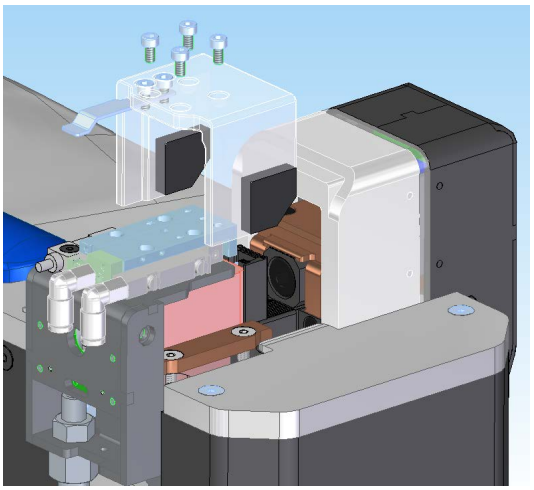	2.5mm hex wrench (EDP: 211-658)
Step 4 Loose the M6 screw, then take down gather tip.	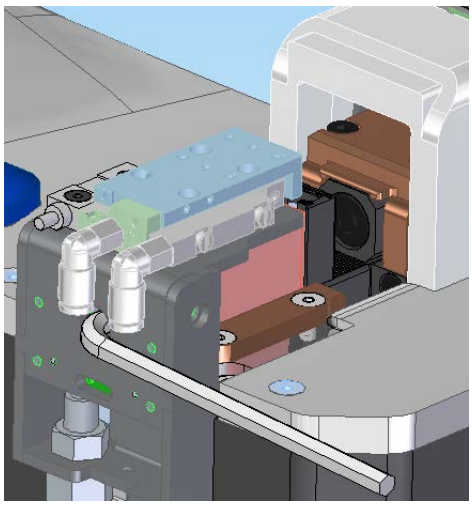	5mm hex wrench (EDP: 211-658)

Table 7.1 Gather Tip Maintenance

Action	Reference	Tools
Step 5 Check wear condition of gather tip, according to actual status, apply different actions: • Polish working surface with a 600-grit emery paper • Reverse and use another working surface • Replace with a new part	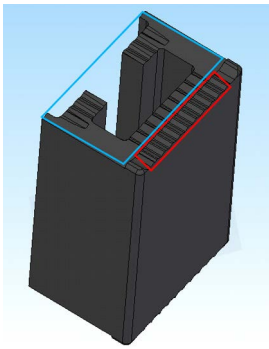	600-grit emery paper (not included in toolkit)
Step 6 **Method 1:** Setup gather tip, insert 0.02mm feeler gauge from the tooth area (red area shows in Step 5 reference image) to adjust the gap between gather tip and horn. **Method 2:** • Put on gather tip, press gather tip onto the horn top surface, the gather tip gets in touch with the horn surface (no gap in the red area) • Then select a piece of feeler gauge that can just go through the gap between the gather tip blue area (shown in step 5 reference image) and the horn surface. The gather tip serration remains in touch with the horn surface • Record the thickness (T) of the piece of feeler gauge that just goes through the gap • Remove the feeler gauge (thickness T) from the gap, and then insert another feeler of 0.02mm more thickness (T+0.02mm) into same gap area	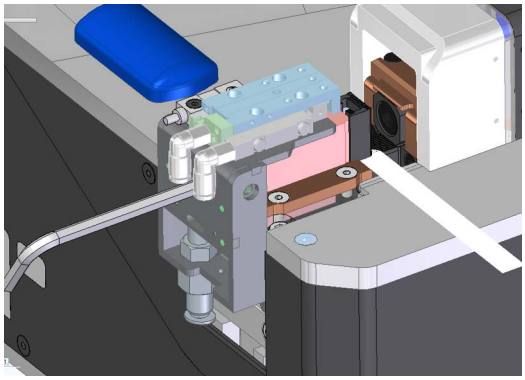	0.02mm feeler gauge (EDP: 1016841) 5mm hex wrench (EDP: 211-658)

Table 7.1 Gather Tip Maintenance

Action	Reference	Tools
Step 7 Tighten the M6 screw with torque 10Nm.	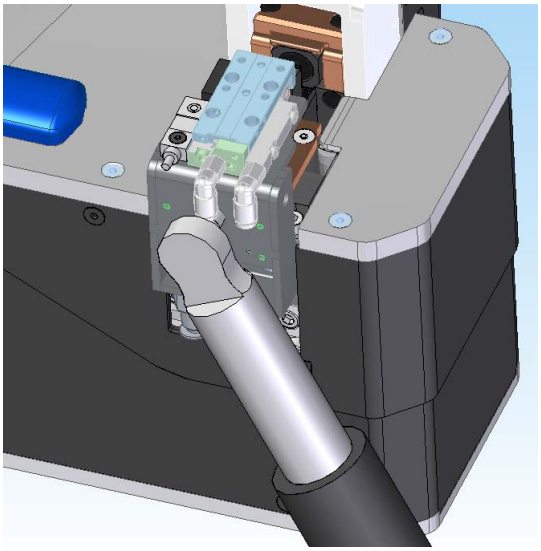	5mm hex socket (EDP: 1014853) Torque wrench 1.5-30Nm (EDP: 1014850)
Step 8 Check the gap, the 0.01mm feeler gauge should pass through and 0.03mm feeler gauge should not fit. If the 0.03mm feeler fits, the gap needs to be re-adjusted as shown in Step 6~Step 7.	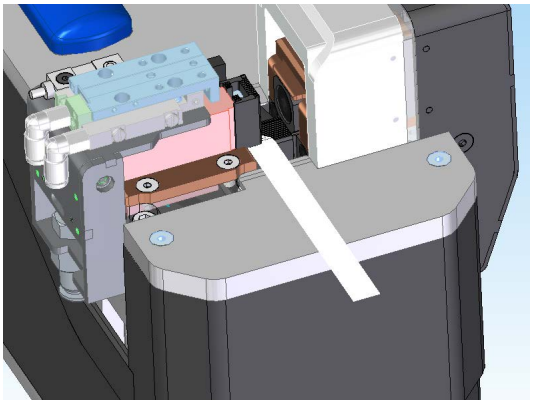	0.01mm feeler gauge (EDP: 1016840) 0.03mm feeler gauge (EDP: 1016842)
Step 9 Install safety guard assembly and gather cover to recover actuator.	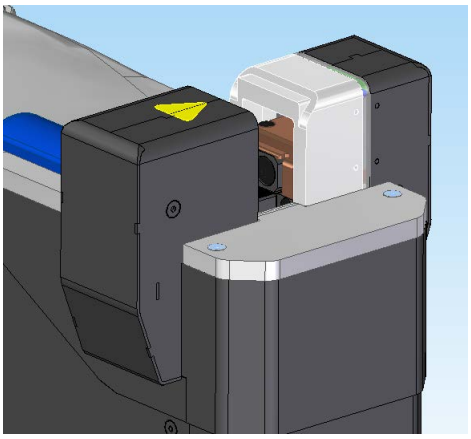	3mm hex wrench (EDP: 211-658) 2.5mm hex wrench (EDP: 211-658)

Table 7.1 Gather Tip Maintenance

Action	Reference	Tools
Step 10 Start system, in HMI, enter 'Maintenance\Advanced Maintenance', test its function following below procedures: • Click '1-Safety', then click '2-Gather' several times to test gather's moving function • Click 'Run Sonics' and 'Run Sonics 100%', confirm the no-load power not exceed 100 Watt, no impact between gather tip and horn as well	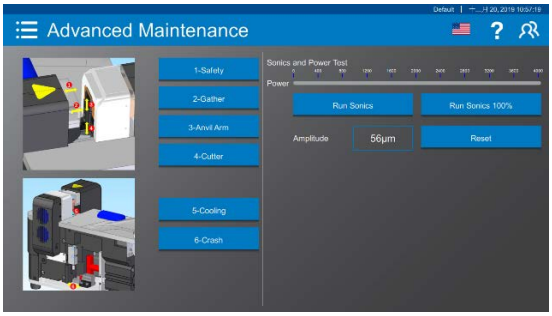	
Step 11 Test maintenance effect through welding some samples. **NOTICE** Recommend weld the smallest cross-section wires and the biggest cross-section wires.		

7.2.2 Anvil Tip Maintenance

Anvil tip maintenance is needed if the following problems arise:

- Anvil Count 80% Alarm
- Anvil Energy 80% Alarm
- Anvil Count 100% Lock
- Anvil Energy 100% Lock
- Severe surface wear or corrosion

Table 7.2 Anvil Tip Maintenance

Action	Reference	Tools
Step 1 Power off controller.	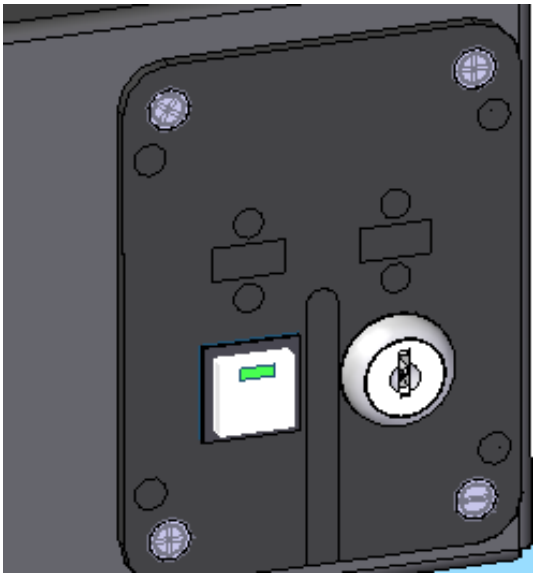	
Step 2 Disconnected Main Harness from Actuator.	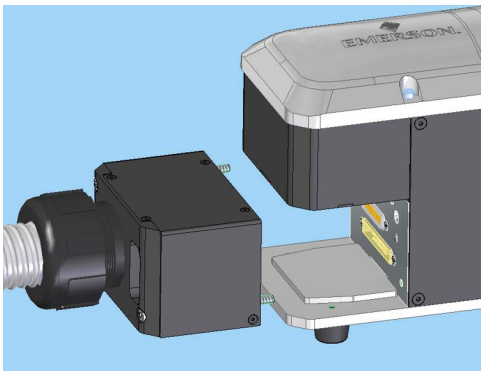	

Table 7.2 Anvil Tip Maintenance

Action	Reference	Tools
Step 3 Press down anvil assembly.	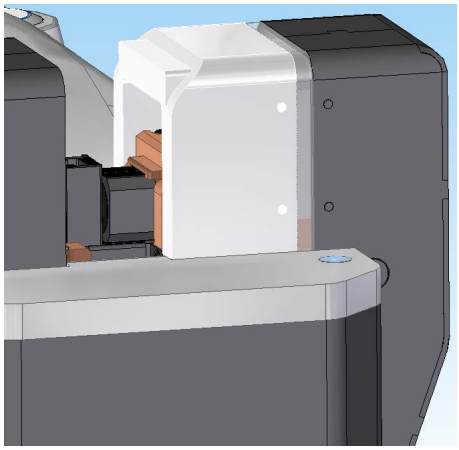	
Step 4 Remove the two M4 screws.	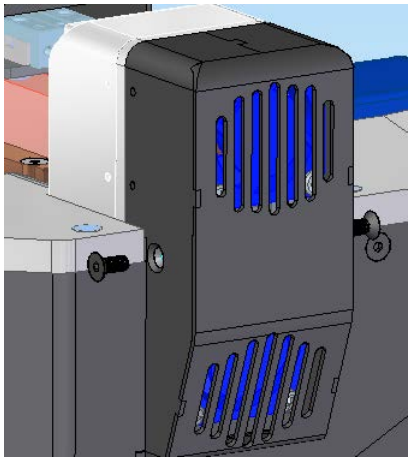	2.5mm hex wrench (EDP: 211-658)
Step 5 Rotate anvil cover in counterclockwise direction and remove it.	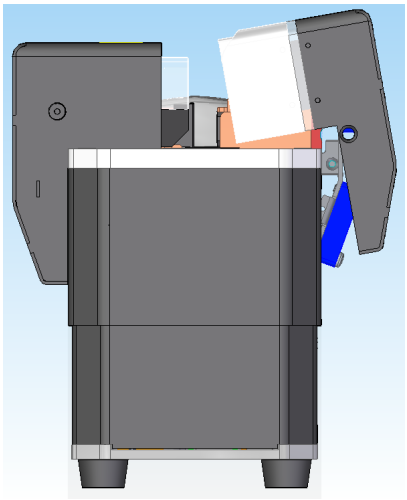	

Table 7.2 Anvil Tip Maintenance

Action	Reference	Tools
Step 6 Remove the four M4 screws and anvil top plate.	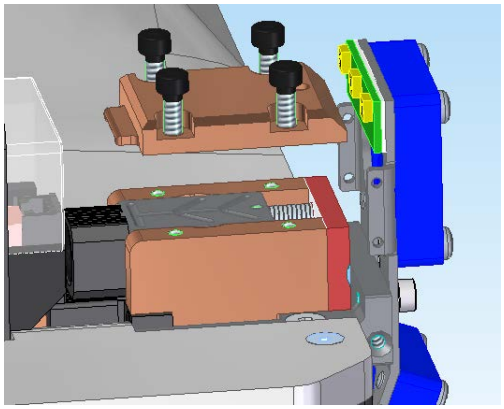	3mm hex wrench (EDP: 211-658)
Step 7 Remove anvil arm assembly, then take down two springs.	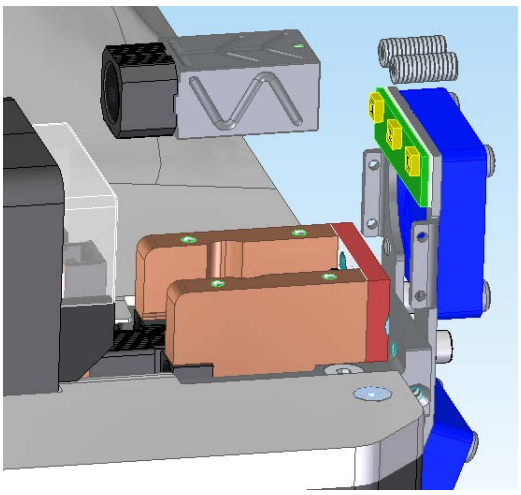	
Step 8 Check wear condition of Anvil Tip, according to actual status, apply different actions: • Polish working surface with a 600-grit emery paper. Go to Step 12 • Reverse and use another working surface. Go to Step 10 • Replace with a new part. Go to Step 10	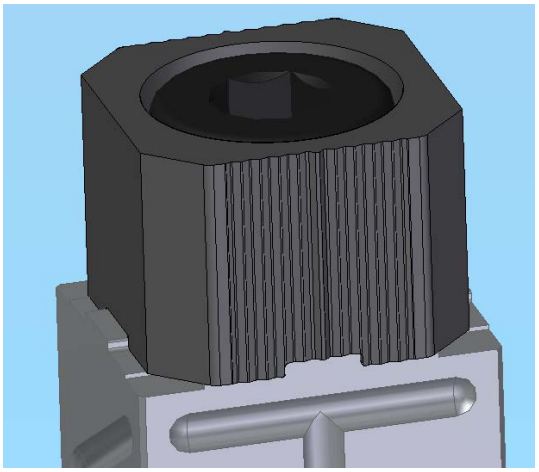	600-grit emery paper (not included in toolkit)

Table 7.2 Anvil Tip Maintenance

Action	Reference	Tools
Step 9 Use bench vise to clamp anvil arm, keep the assembly upright. Loose the M8 screw with a torque wrench. **NOTICE** Set the torque of wrench above 40Nm. Use soft metallic or non-metallic guard to avoid scratching surface of anvil arm.		6mm hex socket (EDP: BU-1014854) Torque wrench (EDP: 211-050)
Step 10 Take down the M8 screw and anvil tip. Reverse anvil tip or replace with new part.	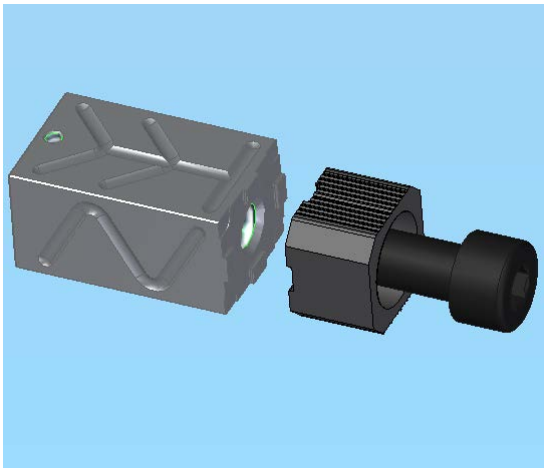	6mm hex wrench (EDP: 211-658)
Step 11 Use bench vise to clamp anvil arm, keep the assembly upright. Tighten the M8 screw with torque 40Nm. **NOTICE** Use soft metallic or non-metallic guard to avoid scratching surface of anvil arm.		6mm hex socket (EDP: BU-1014854) Torque wrench (EDP: 211-050)

Table 7.2 Anvil Tip Maintenance

Action	Reference	Tools
Step 12 Clean the four surfaces of Anvil Arm, then apply a proper amount of grease in grooves. **NOTICE** Keep Anvil Tip free of grease. Recommend Shell S2V2202 or similar grease.		
Step 13 Put anvil arm assembly and springs back to Actuator. **NOTICE** Ensure Anvil Arm Level insert in bottom concave pit of Anvil Arm.	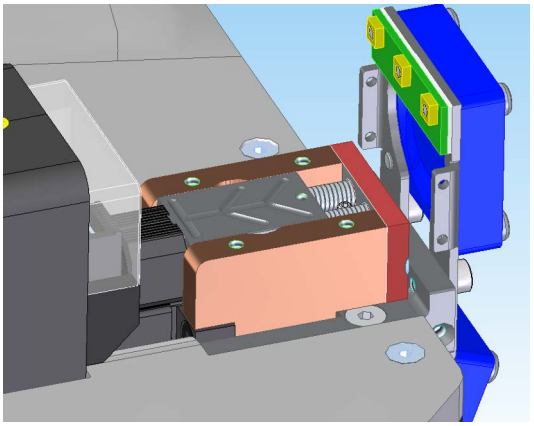 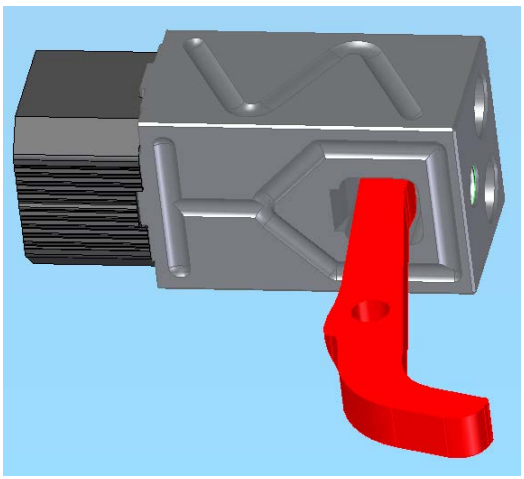	

Table 7.2 Anvil Tip Maintenance

Action	Reference	Tools
Step 14 Install anvil top plate, tighten the four M4 screw with torque 4Nm.	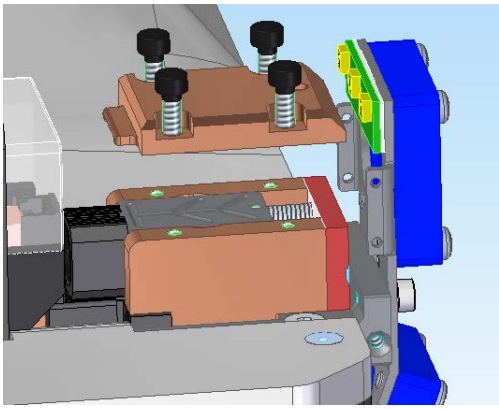	3mm hex socket (EDP: 1014851) Torque wrench 1.5-30Nm (EDP: 1014850)
Step 15 Install anvil cover, connect main harness and actuator.	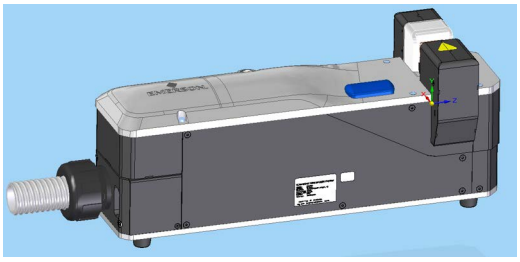	2.5mm hex wrench (EDP: 211-658)
Step 16 Start system, in HMI, enter 'Maintenance\Advanced Maintenance', test its function following below procedures: • Click '1-Safety', then click '3-Anvil Arm' several times to test anvil's moving function	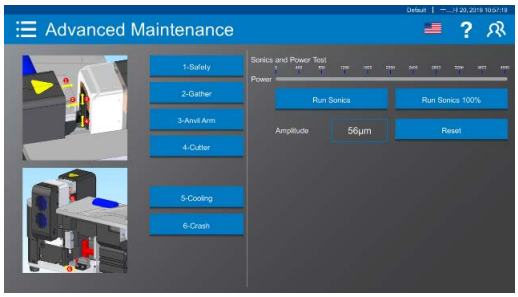	

7.2.3 Anvil Tip Guide Maintenance

Anvil tip guide maintenance is needed if the following problems arise:

- Guide Count 80% Alarm
- Guide Energy 80% Alarm
- Guide Count 100% Lock
- Guide Energy 100% Lock
- Too small gap between Anvil Tip Guide and Horn, which may lead to impact or overload
- Too big gap between Anvil Tip Guide and Horn, which may lead to flash

Table 7.3 Anvil Tip Guide Maintenance

Action	Reference	Tools
Step 1 Power off controller.	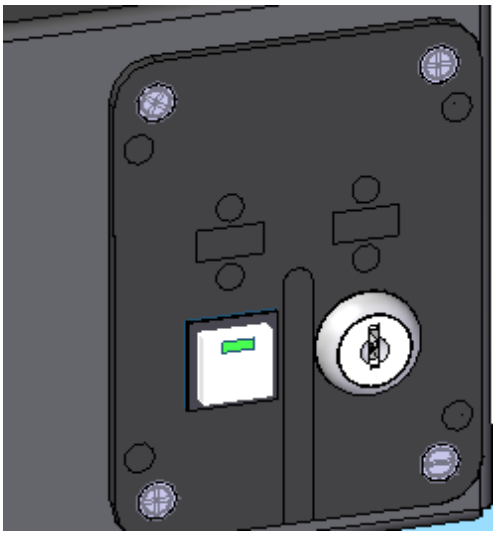	
Step 2 Disconnected Main Harness from Actuator.	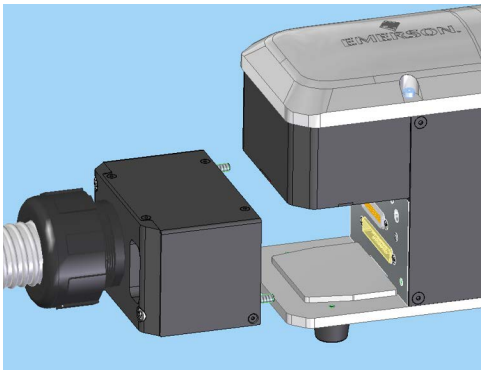	

Table 7.3 Anvil Tip Guide Maintenance

Action	Reference	Tools
Step 3 Press down anvil assembly.	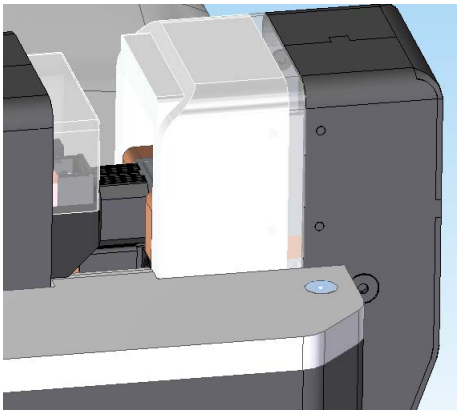	
Step 4 Remove anvil cover, anvil top plate and anvil arm assembly as Table 7.2 Step 4 ~ Step 7.	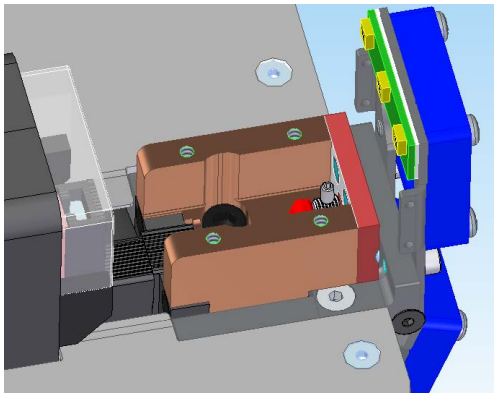	2.5mm hex wrench (EDP: 211-658) 3mm hex wrench (EDP: 211-658)
Step 5 Loose the two M6 screws, remove M6 screws, washer plate and anvil guide assembly.	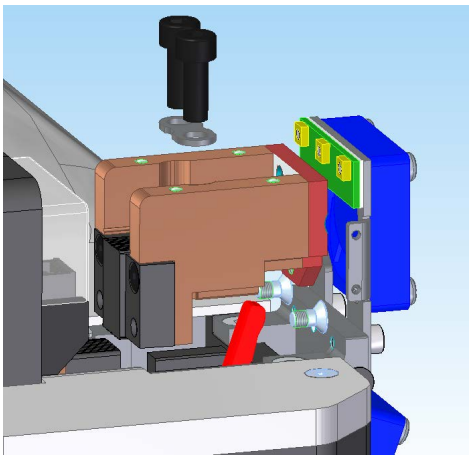	5mm hex wrench (EDP: 211-658)

Table 7.3 Anvil Tip Guide Maintenance

Action	Reference	Tools
Step 6 Check wear condition of Anvil Tip Guide, according to actual status, apply different actions: • Polish working surface with a 600-grit emery paper. Go to Step 13 • Reverse and use another working surface. Go to Step 7 • Replace with a new part. Go to Step 7	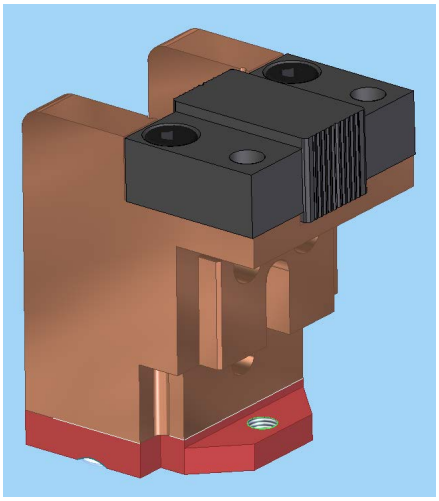	600-grit emery paper (not included in toolkit)
Step 7 Use bench vise to clamp anvil guide assembly, keep the assembly upright. Loose the two M4 screw with a hex wrench, take down anvil tip guide. Reverse anvil tip guide or replace with new part. **NOTICE** Use soft metallic or non-metallic guard to avoid scratching surface of anvil arm guide.		3mm hex wrench (EDP: 211-658)
Step 8 Put back anvil arm assembly (without springs) in anvil arm guide.	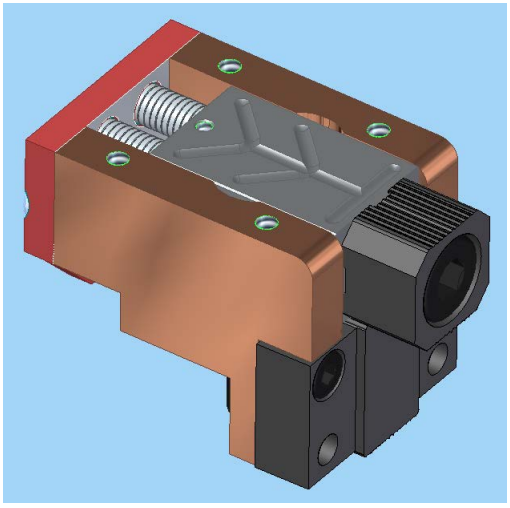	

Table 7.3 Anvil Tip Guide Maintenance

Action	Reference	Tools
Step 9 Install anvil top plate, tighten the four top M4 screws, don't tighten the two lateral M4 screws.	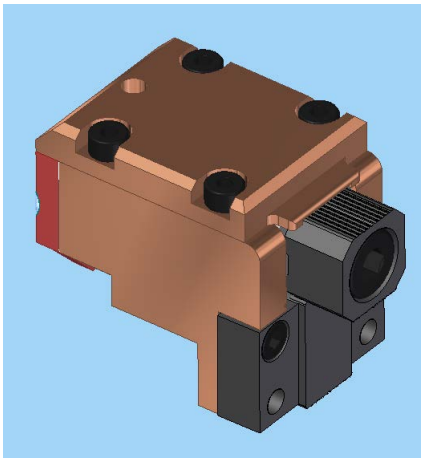	3mm hex wrench (EDP: 211-658)
Step 10 Move anvil tip guide to a suitable position in vertical direction for that anvil arm assembly can slide free.		3mm hex wrench (EDP: 211-658)
Step 11 Use bench vise to clamp the assembly, which should be kept upright. Tighten the two lateral M4 screws with torque 4Nm.		3mm hex socket (EDP: 1014851) Torque wrench 1.5-30Nm (EDP: 1014850)

Table 7.3 Anvil Tip Guide Maintenance

Action	Reference	Tools
Step 12 Remove anvil top plate and anvil arm assembly from anvil guide assembly.	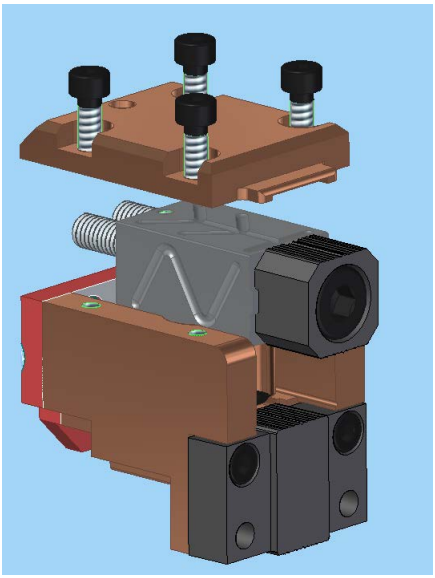	3mm hex wrench (EDP: 211-658)
Step 13 Put anvil guide assembly back to actuator, insert 0.02mm feeler gauge between anvil tip guide and horn, rotate the screw to push & pull anvil assembly for adjusting the gap between anvil tip guide and horn	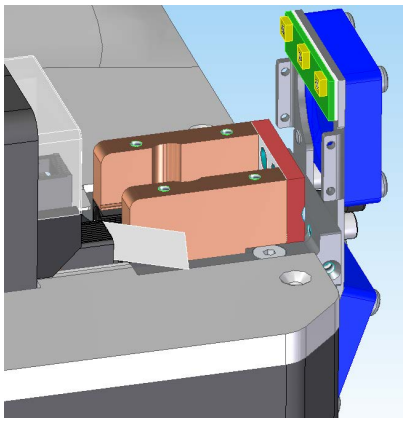 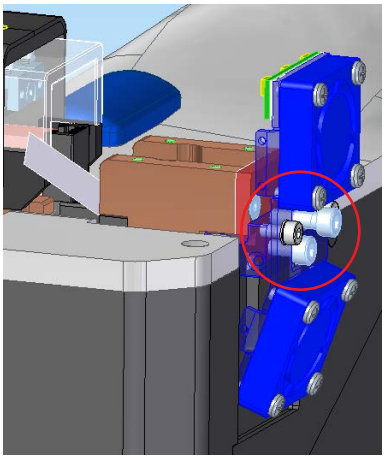	0.02mm feeler gauge (EDP: 1016841) 5mm hex wrench (EDP: 211-658)

Table 7.3 Anvil Tip Guide Maintenance

Action	Reference	Tools
Step 14 Tighten the two M6 screws with torque 14Nm. **NOTICE** The torque should be applied alternately in 3~4 loops. Such as 3Nm-8Nm-14Nm.	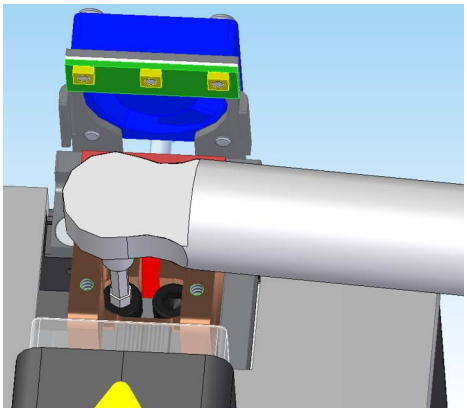	5mm hex socket (EDP: 1014853) Torque wrench 1.5-30Nm (EDP: 1014850)
Step 15 Check the gap, the 0.01mm feeler gauge should pass through and 0.03mm feeler gauge should not fit. If the 0.03mm feeler fits, the gap needs to be re-adjusted as shown in Step 13 ~ Step 14.	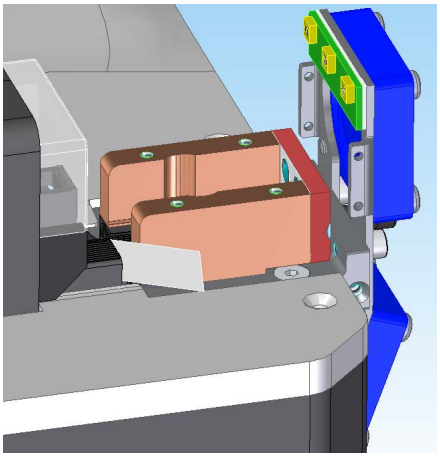	0.01mm feeler gauge (EDP: 1016840) 0.03mm feeler gauge (EDP: 1016842)
Step 16 According to Table 7.2 Step 13 ~ Step 15, install anvil arm assembly, springs, anvil top plate and anvil cover to recover actuator, connect main harness back to actuator. **NOTICE** If necessary, clean Anvil Arm and apply grease, refer to Table 7.2 Step 12.	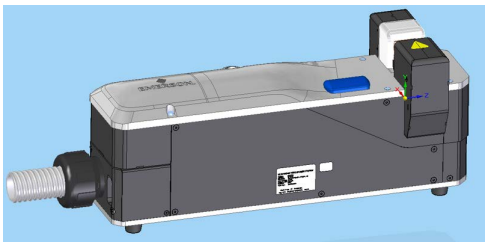	3mm hex socket (EDP: 1014851) Torque wrench 1.5-30Nm (EDP: 1014850) 2.5mm hex wrench (EDP: 211-658)

Table 7.3 Anvil Tip Guide Maintenance

Action	Reference	Tools
Step 17 Start system, in HMI, enter 'Maintenance\Advanced Maintenance', test its function following below procedures: • Click '1-Safety', then click '3-Anvil Arm' several times to test anvil's moving function • Click 'Run Sonics' and 'Run Sonics 100%', confirm the no-load power not exceed 100 Watt, no impact between gather tip and horn as well	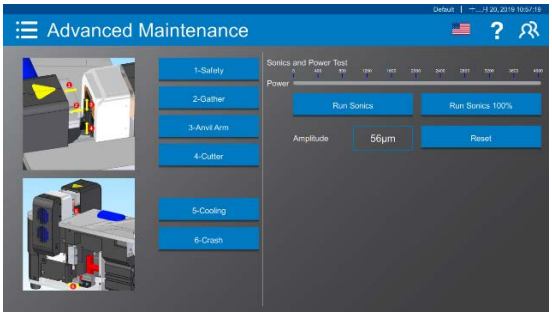	
Step 18 Test maintenance effect through welding some samples. **NOTICE** Recommend weld the smallest cross-section wires and the biggest cross-section wires.	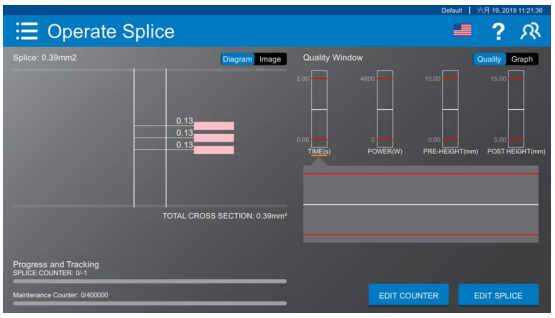	

7.2.4 Horn Maintenance

Horn maintenance is needed if the following problems arise:

- Horn Count 80% Alarm
- Horn Energy 80% Alarm
- Horn Count 100% Lock
- Horn Energy 100% Lock
- Too small gap between Anvil Tip Guide and Horn, which may lead to impact or overload
- Too big gap between Anvil Tip Guide and Horn, which may lead to flash
- Too small gap between Gather Tip and Horn, which may lead to impact or overload
- Too big gap between Gather Tip and Horn, which may lead to flash
- Severe surface wear or corrosion

Table 7.4 Horn Maintenance

Action	Reference	Tools
Step 1 Power off controller.	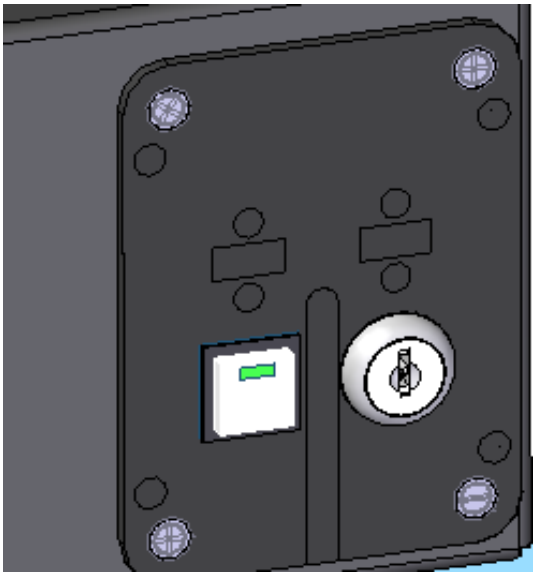	
Step 2 Remove gather cover, safety guard assembly and gather tip as Table 7.1 Step 2 ~ Step 4.	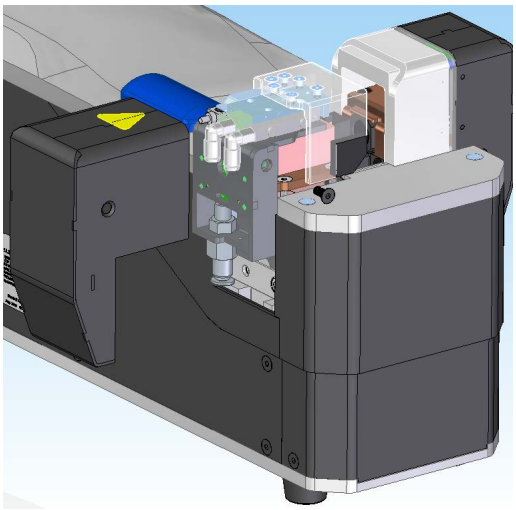	2.5mm hex wrench (EDP: 211-658) 5mm hex wrench (EDP: 211-658)

Table 7.4 Horn Maintenance

Action	Reference	Tools
Step 3 Remove the four M4 screws and big top cover.	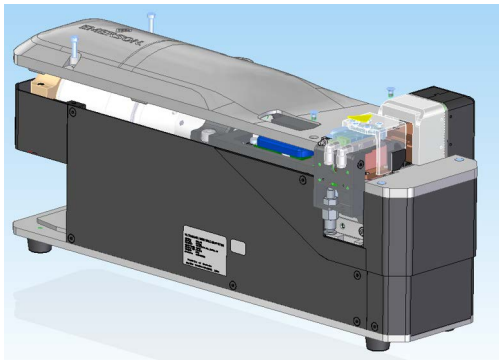	2.5mm hex wrench (EDP: 211-658) 3mm hex wrench (EDP: 211-658)
Step 4 Remove the two M6 screws and two M5 screws, then remove conical washer, booster clamp and horn nodal clamp.	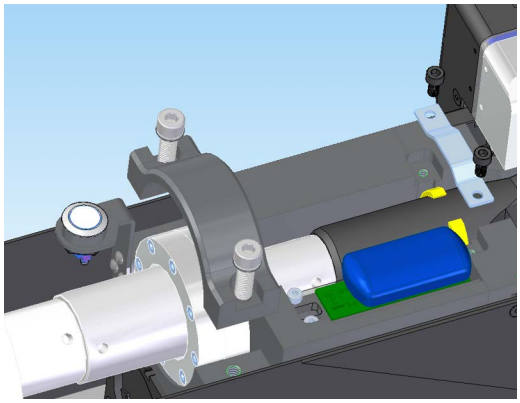	5mm hex wrench (EDP: 211-658) 4mm hex wrench (EDP: 211-658)
Step 5 Loose the two M4 screws to let the RF cover rotate free.	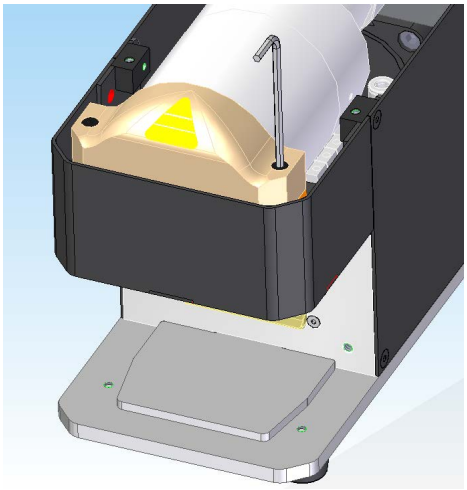	3mm hex wrench (EDP: 211-658)

Table 7.4 Horn Maintenance

Action	Reference	Tools
Step 6 Rotate stack assembly in clockwise direction and take down it. At the same time, remove RF cover.	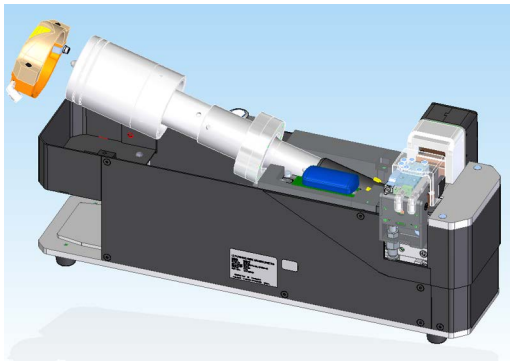	
Step 7 Check wear condition of horn, according to actual status, apply different actions: • Polish working surface with a 600-grit emery paper. Go to Step 11 • Reverse and use another working surface, keep horn nodal ring original direction still. Go to Step 11 • Replace with a new part. Go to Step 8		600-grit emery paper (not included in toolkit)
Step 8 Apply bench vise to clamp horn head, keep stack upright. Loose converter and booster from horn assembly with tools. **NOTICE** Set the torque of wrench above 100Nm. Use soft metallic or non-metallic guard to avoid scratching surface of horn head.		Spanner Wrench (EDP: 48000-03-011) 1/2" torque wrench (EDP: 211-050)
Step 9 Replace the horn assembly with a new one. **NOTICE** Carefully take down and mount the horn nodal ring, avoid damage		

Table 7.4 Horn Maintenance

Action	Reference	Tools
Step 10 Apply bench vise to clamp horn head, keep horn upright. Mount converter and booster to horn, then tighten it with torque 95Nm (70ft.lbs). **NOTICE** Use soft metallic or non-metallic guard to avoid scratching surface of horn head.	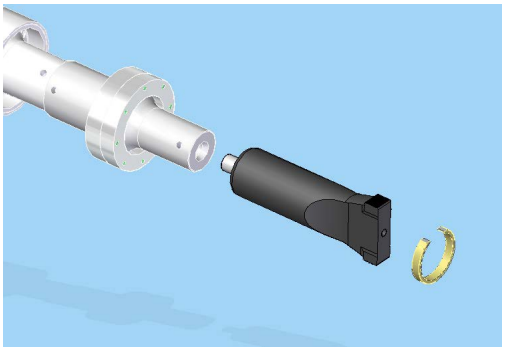	Spanner Wrench (EDP: 48000-03-011) 1/2” torque wrench (EDP: 211-050)
Step 11 Put stack back to actuator, meanwhile, mount RF cover to convert, tighten two M4 screws.	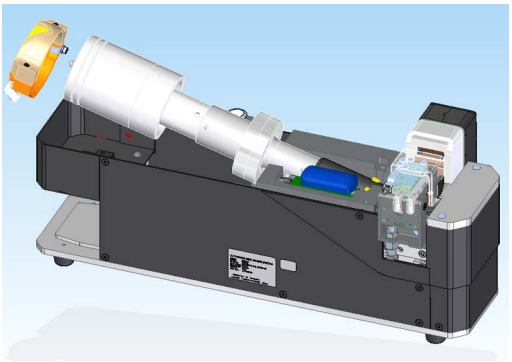	3mm hex wrench (EDP: 211-658)

Table 7.4 Horn Maintenance

Action	Reference	Tools
Step 12 Install the alignment tool to gather tip clamp, then tighten the M6 screw. **NOTICE** The bottom of tool can't contact horn, keep gap 2mm~4mm.	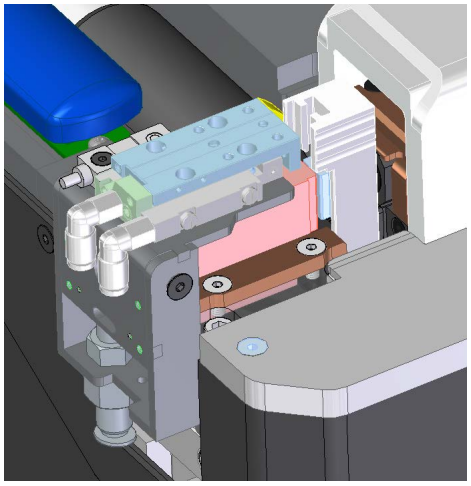 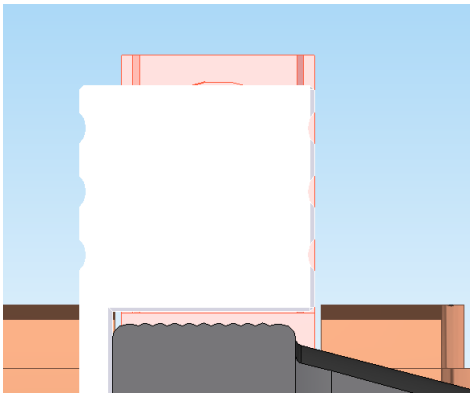	Alignment tool (EDP: 1010028)
Step 13 Move the stack till the horn is against the tool. **NOTICE** Recommend operator hold stack in the light green area.	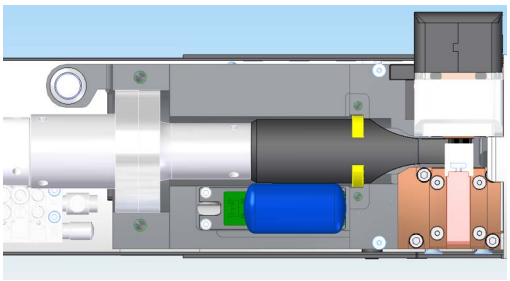	

Table 7.4 Horn Maintenance

Action	Reference	Tools
Step 14 Take down the alignment tool, install gather tip to gather tip clamp, keep M6 screw loose. Check whether the corrugated profiles of gather tip and horn match. If not, re-adjust horn's position as Step 12 ~ Step 13.	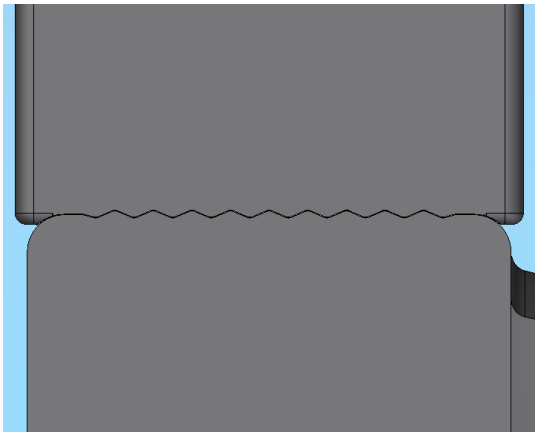	
Step 15 Insert the 0.02 feeler gauge to the gap between horn and anvil tip guide, rotate stack to adjust the gap and stack's angle. **NOTICE** Avoid moving stack in horizontal direction.	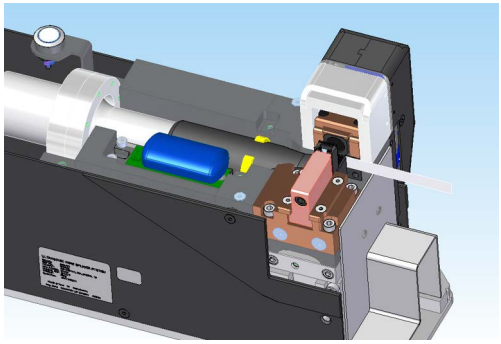	0.02mm feeler gauge (EDP: 1016841)
Step 16 Put back horn nodal clamp, tighten two M5 screws with torque 8Nm. **NOTICE** The torque should be applied alternately in 2~3 loops. Such as 2Nm-5Nm-8Nm. In tighten process, check gap's variation.	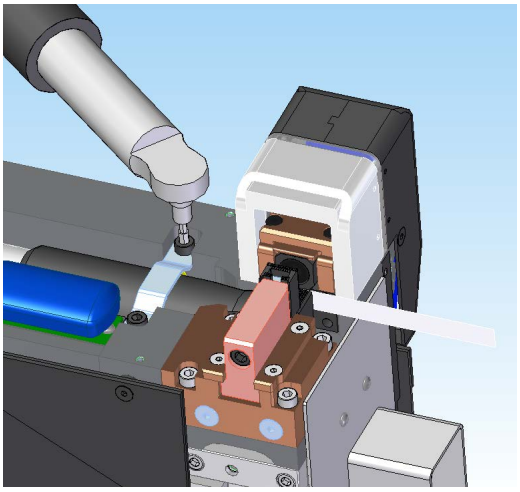	4mm hex wrench (EDP: 211-658) 4mm hex socket (EDP: 1014852) Torque wrench 1.5-30Nm (EDP: 1014850) 0.02mm feeler gauge (EDP: 1016841)

Table 7.4 Horn Maintenance

Action	Reference	Tools
Step 17 Put back booster clamp on booster, then install conical washers and M8 screws. **NOTICE** The bottom surface of booster clamp should be parallel to top surface of housing.	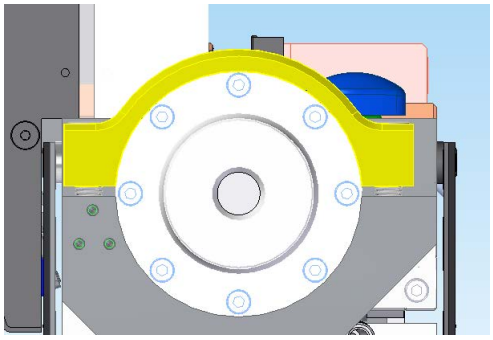	6mm hex wrench (EDP: 211-658)
Step 18 Tighten two M8 screws with torque 14Nm. **NOTICE** The torque should be applied alternately in 3~4 loops. Such as 3Nm-8Nm-14Nm. In tighten process, check gap's variation.	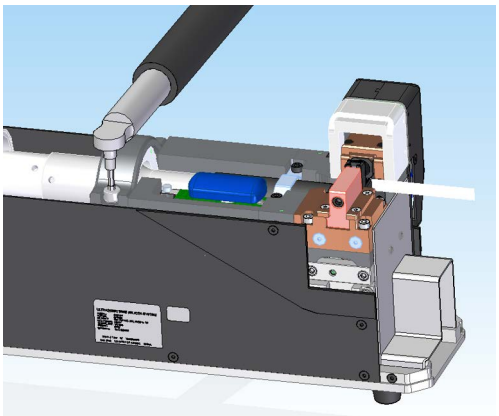	6mm hex socket (EDP: 1014854) Torque wrench 1.5-30Nm (EDP: 1014850) 0.02mm feeler gauge (EDP: 1016841)
Step 19 Check the gap, the 0.01mm feeler gauge should pass through and 0.03mm feeler gauge should not fit. If the 0.03mm feeler fits, the gap needs to be re-adjusted as shown in Step 15 ~ Step 18.	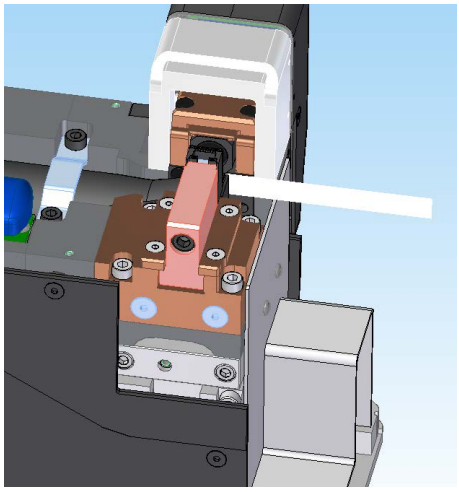	0.01mm feeler gauge (EDP: 1016840) 0.03mm feeler gauge (EDP: 1016842)

Table 7.4 Horn Maintenance

Action	Reference	Tools
Step 20 Adjust the gap between gather tip and horn, then tighten M6 screw, as Table 7.1 Step 6 ~ Step 8.	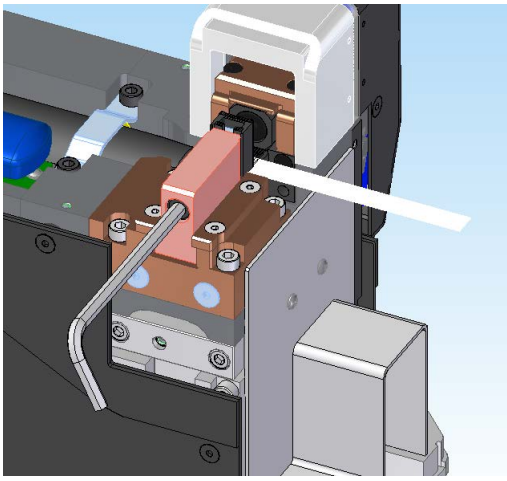	0.01mm feeler gauge (EDP: 1016840) 0.02mm feeler gauge (EDP: 1016841) 0.03mm feeler gauge (EDP: 1016842) 5mm hex wrench (EDP: 211-658) 5mm hex socket (EDP: 1014853) Torque wrench 1.5-30Nm (EDP: 1014850)
Step 21 Install safety guard assembly, gather cover and big top cover to recover actuator.	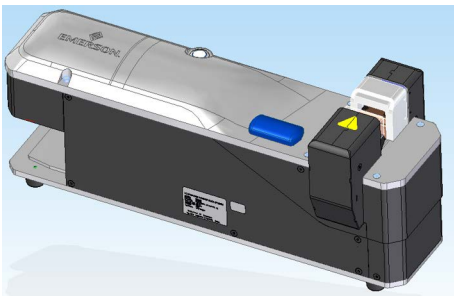	2.5mm hex wrench (EDP: 211-658) 3mm hex wrench (EDP: 211-658)
Step 22 Start system, in HMI, enter 'Maintenance\Advanced Maintenance', test its function following below procedures: • Click '1-Safety', then click '2-Gather' several times to test gather's moving function, at last, click '3-Anvil Arm' several times to test anvil's moving function • Click 'Run Sonics' and 'Run Sonics 100%', confirm the no-load power not exceed 100 Watt, no impact between gather tip and horn as well	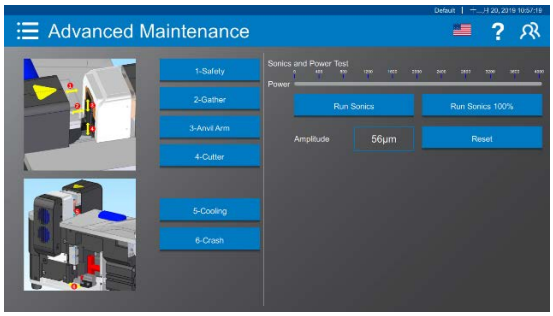	

Table 7.4 Horn Maintenance

Action	Reference	Tools
Step 23 Test maintenance effect through welding some samples. **NOTICE** Recommend weld the smallest cross-section wires and the biggest cross-section wires.	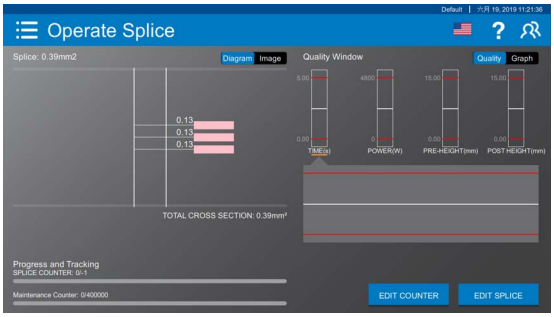	

7.2.5 Cutter Maintenance (Optional)

If the cutter blade is blunt, curved, or broken, cutting performance will be affected, and it needs to be replaced.

Table 7.5 Cutter Replacement

Action	Reference	Tools
Step 1 Power off controller.	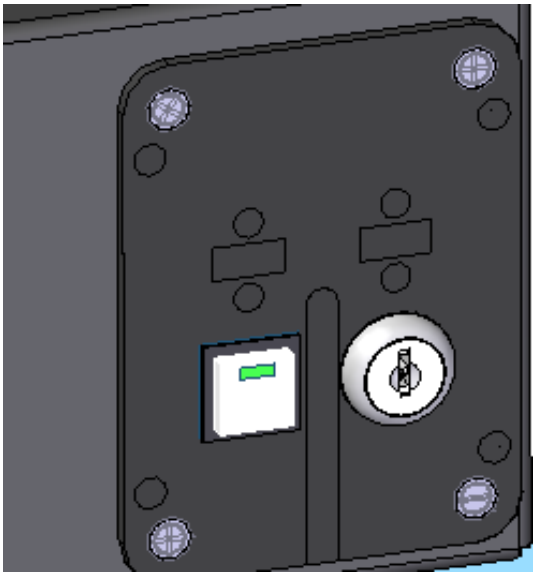	
Step 2 Disconnected Main Harness from Actuator.	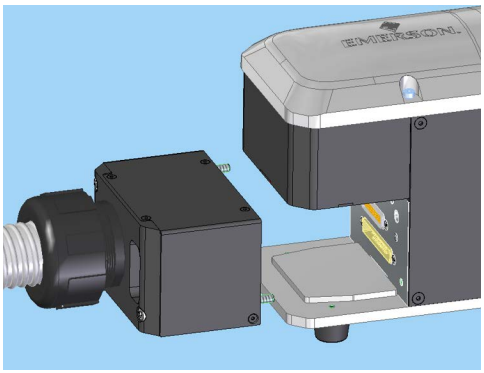	
Step3 Remove the two M4 screws and small top cover.	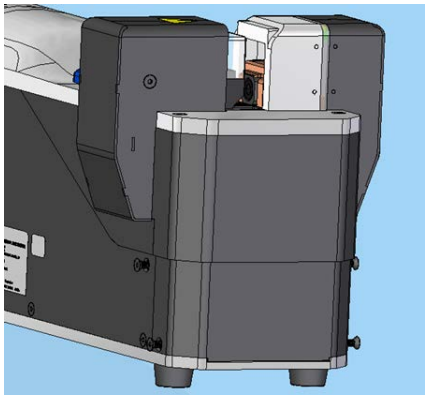	2.5mm hex wrench (EDP: 211-658)

Table 7.5 Cutter Replacement

Action	Reference	Tools
Step 4 Loose the M5 screw.	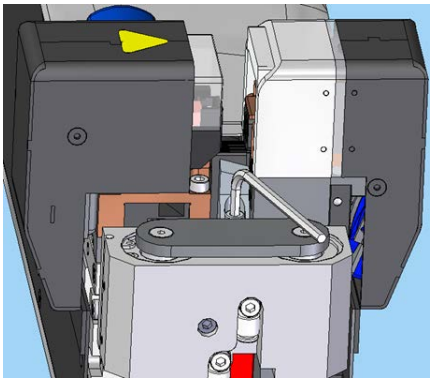	4mm hex wrench (EDP: 211-658)
Step 5 Remove cutter blade.	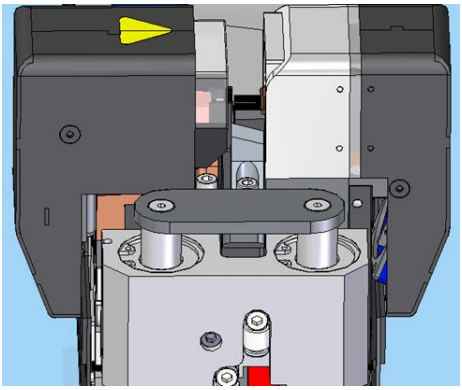	
Step 6 Press down anvil and pull up the cutter bracket with a hex wrench.	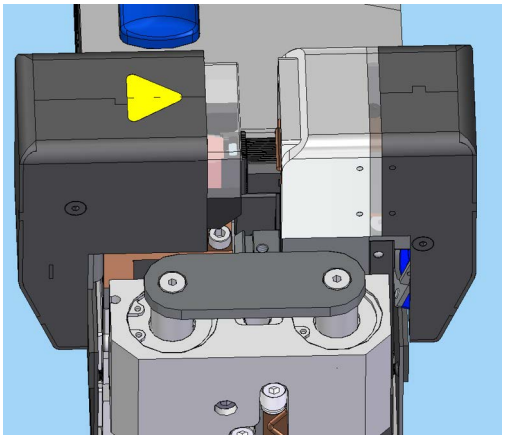	

Table 7.5 Cutter Replacement

Action	Reference	Tools
Step 7 Put new cutter blade back to cutter bracket, insert 0.4mm feeler gauge to the gap between the cutter blade and anvil tip, meanwhile, adjust the position of the cutter blade in the direction shown in the picture till it contact the gauge.	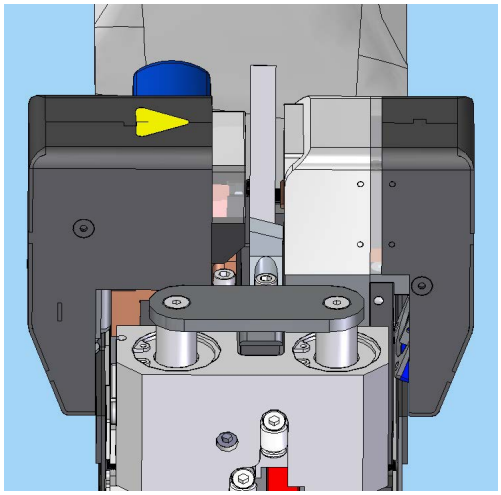	
Step 8 Tighten the M5 screw, then check the gap, the 0.3mm feeler gauge should pass through and 0.5mm feeler gauge should not fit. If the 0.03mm feeler fits, the gap needs to be re-adjusted as shown in Step 4 ~ Step 7.	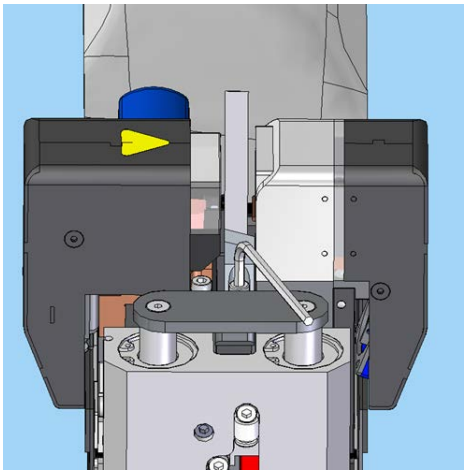	4mm hex wrench (EDP: 211-658)
Step 9 Tighten the four screws of cutter cover.	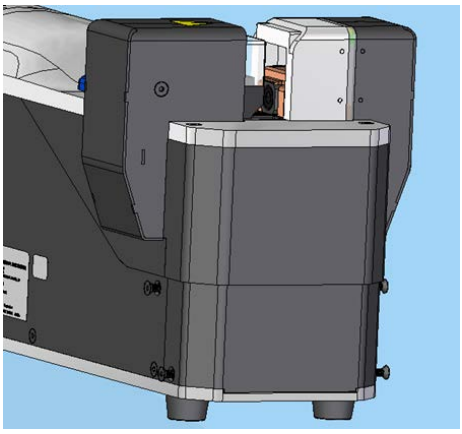	2.5mm hex wrench (EDP: 211-658)

Table 7.5 Cutter Replacement

Action	Reference	Tools
Step 10 Start system, in HMI, enter 'Maintenance\Advanced Maintenance', test its function following below procedure: • Click '1-Safety', then click '4-Cutter' several times to test gather's moving function	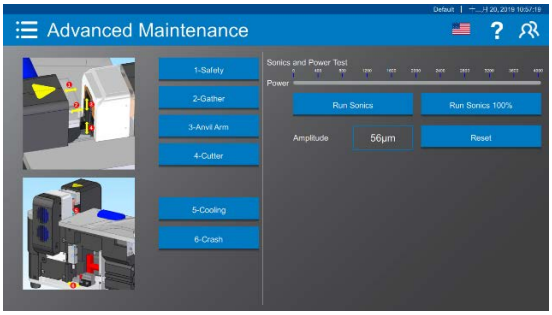	
Step 11 Enter 'Setting\Configuration', enable 'Cutter Option', set Duration time.	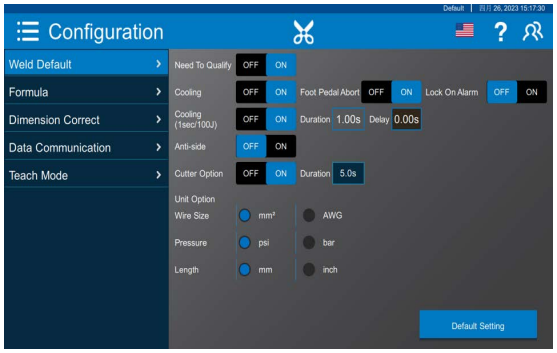	
Step 12 Enter 'Operate\Splice', click 'EDIT SPLICE'. In the interface, set quality window ('Time' or 'Peak power' or 'Post Height') to a narrow rage for triggering automatic cutting wires action. Then weld some samples to test the cutting function. **NOTICE** Recommend test the smallest cross-section wires and the biggest cross-section wires.	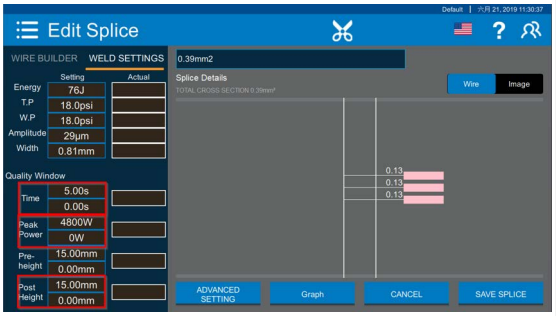	

7.2.6 Anvil Tip Position Adjustment

It is recommended that the operator check the Anvil Tip's position regularly.

Ensure that the Anvil Tip is aligned to the Anvil Tip Guide in home position (see Figure 7.1). If it is necessary, adjust using the following procedure.

Figure 7.1 Correct position of anvil tip

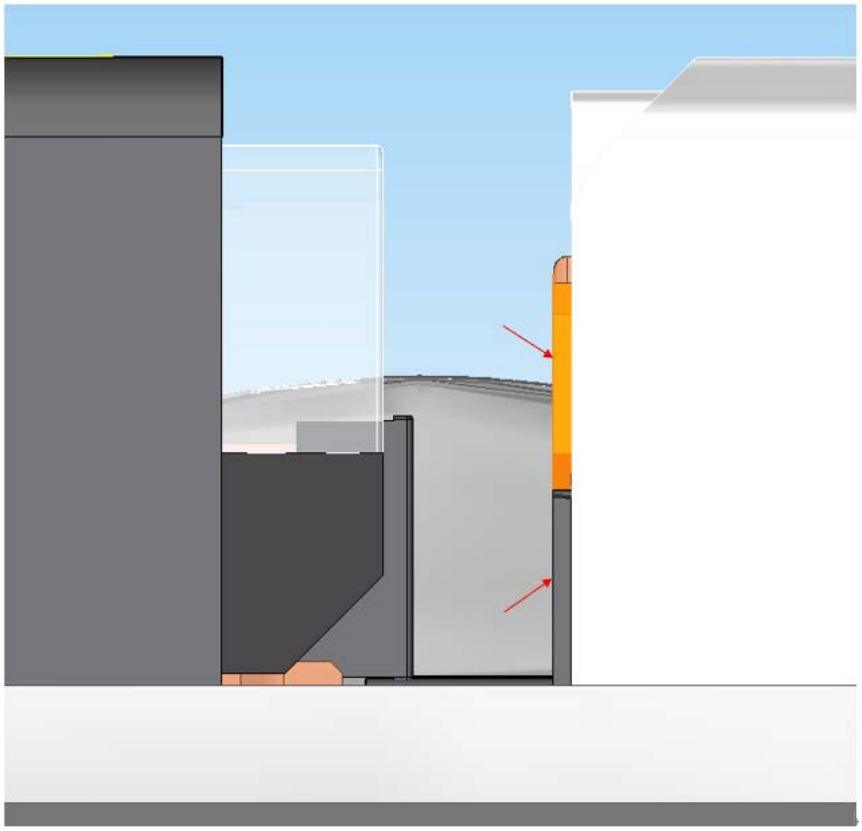

NOTICE	
	Abnormal position of Anvil Tip may affect putting wires in pocket or lead to wires pinching.

Table 7.6 Anvil Tip Position Adjustment

Action	Reference	Tools
Step 1 In HMI, enter 'Maintenance\Advanced Maintenance'. Click '1-Safety', '3-Anvil Arm' to drop down the anvil assembly.	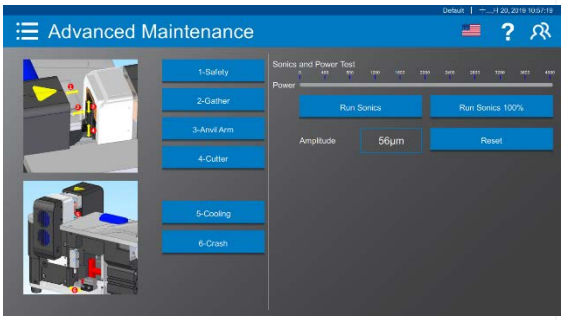	
Step 2 Remove two M4 screws and anvil cover.	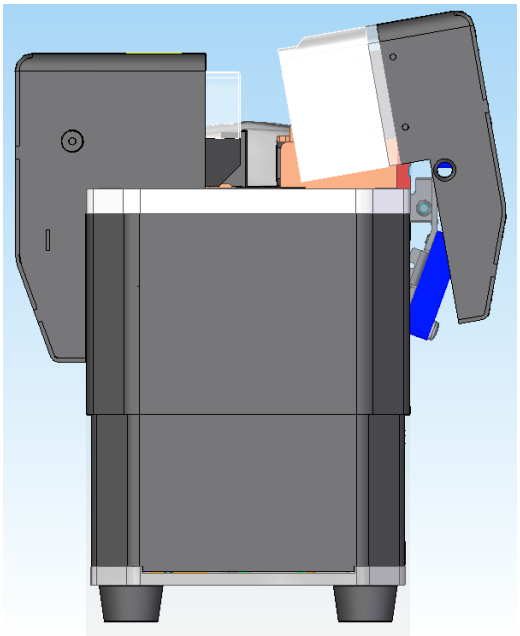	2.5mm hex wrench (EDP: 211-658)
Step 3 Operate HMI, let anvil assembly and safety guard go back to home position, then power off controller.	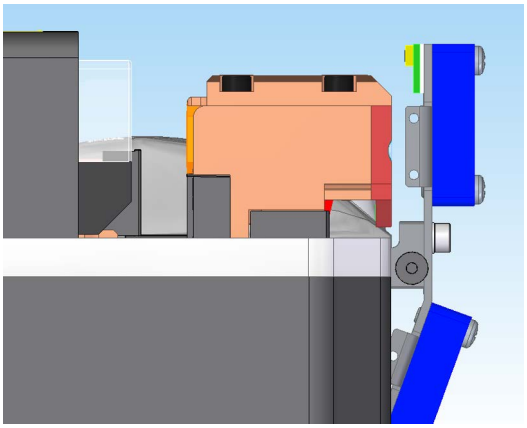	

Table 7.6 Anvil Tip Position Adjustment

Action	Reference	Tools
Step 4 Loose the M3 set screw mounted in anvil arm.	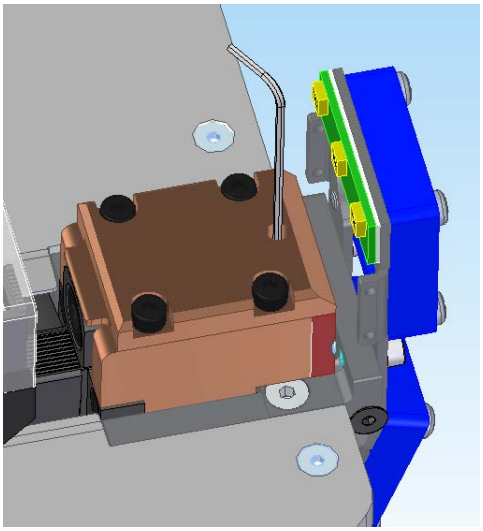	1.5mm hex wrench (EDP: 211-658)
Step 5 Insert a 2.5mm hex wrench through holes of fan and plate, then adjust Anvil Tip's position by rotating the M5 set screw mounted in anvil arm. **NOTICE** Anvil Tip's moving direction is opposite to the set screw's.	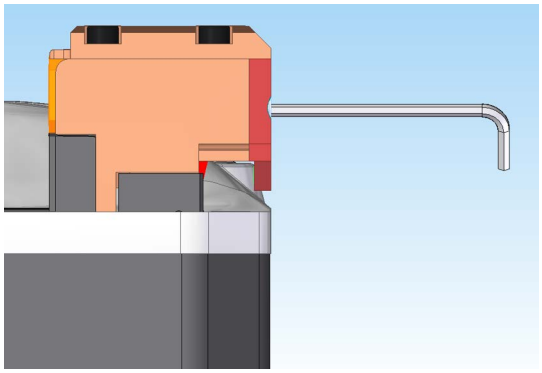	2.5mm hex wrench (EDP: 211-658)
Step 6 When Anvil Tip aligns to Anvil Tip Guide, tighten the M3 set screw, then install the anvil cover back to actuator. **NOTICE** Before install the anvil cover, system should be started and anvil assembly should be at downward position.	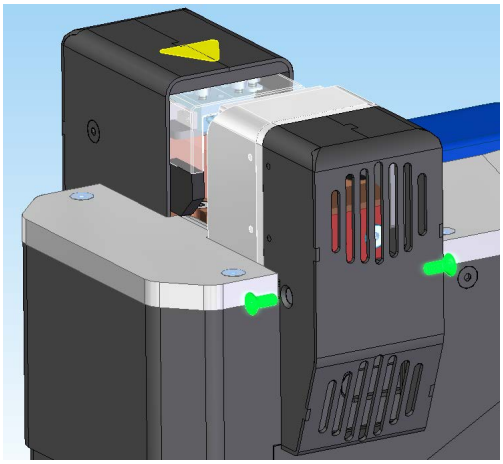	1.5mm hex wrench 2.5mm hex wrench (EDP: 211-658)

7.2.7 Crash Down Gap Calibration

To avoid Anvil Tip to contact the Horn under miss-wires welding condition, the gap between Anvil Tip and Horn has been set to 0.2mm (factory default).

If the gap is out of the 0.1mm~0.3mm range, it needs to be adjusted.

Table 7.7 Checking the gap

Action	Reference	Tools
Step 1 In HMI, enter 'Maintenance\Advanced Maintenance'. Click '1-Safety', '3-Anvil Arm'.	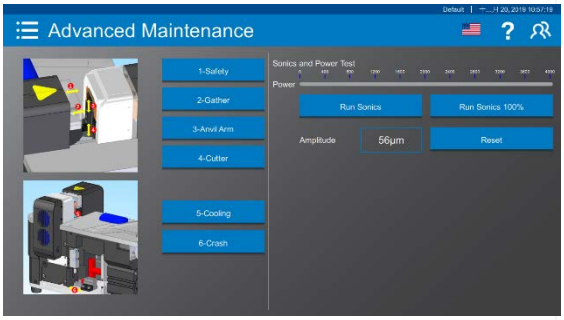	
Step 2 Insert feeler gauge between Anvil Tip and Horn, the 0.1mm feeler gauge should pass through and 0.3mm feeler gauge should not fit. If the 0.03mm feeler fits, the gap needs to be re-adjusted.	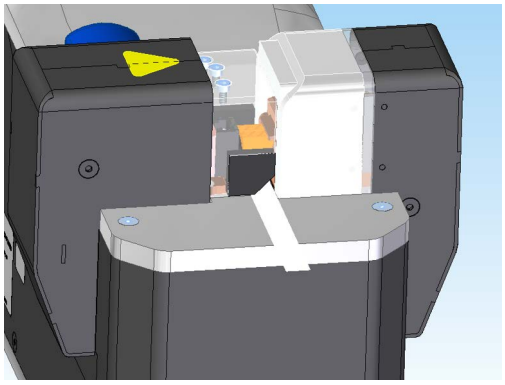 	0.1mm feeler gauge 0.3mm feeler gauge (Not included in toolkit)

Table 7.8 Adjusting the gap

Action	Reference	Tools
Step 1 Remove 7 M4 screws and lateral enclosure on anvil side.	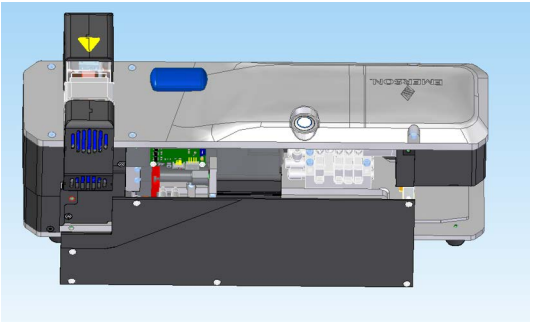	2.5mm hex wrench (EDP: 211-658)
Step 2 In HMI, set the air pressure to 10~20psi, then drop down anvil assembly in Advanced Maintenance interface.	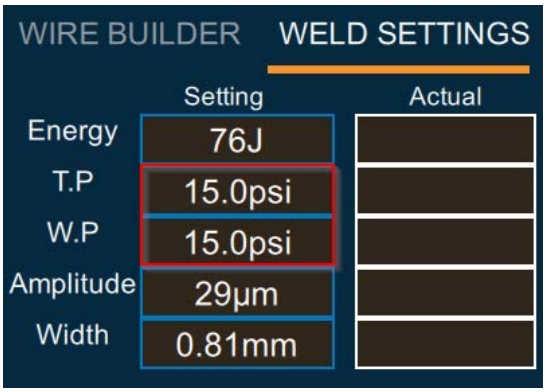	

Table 7.8 Adjusting the gap

Action	Reference	Tools
Step 3 Loose the M4 set screw mounted in crash down block.	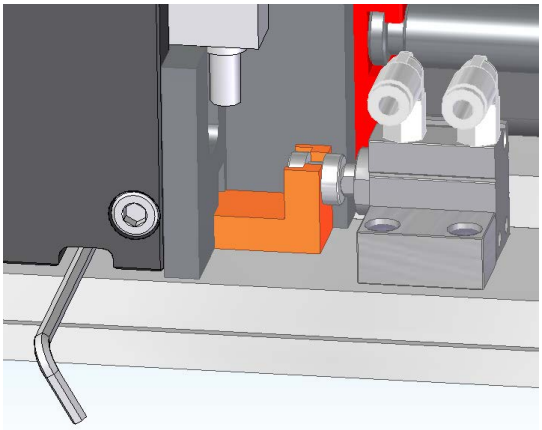 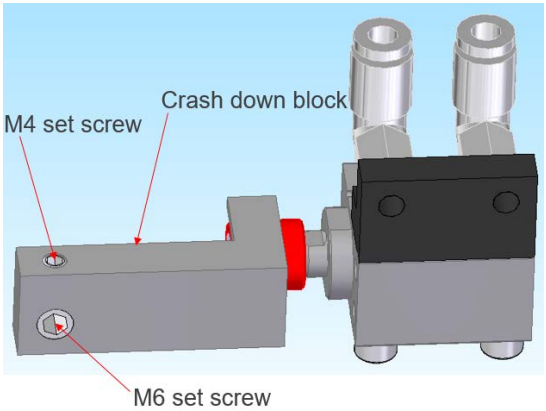	2mm hex wrench (EDP: 211-658)
Step 4 Rotate the M6 set screw mounted in crash down block from bottom of base plate.	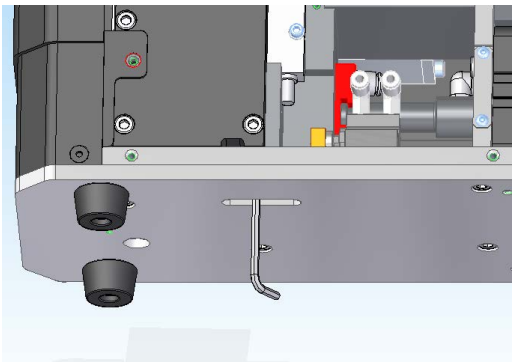	3mm hex wrench (EDP: 211-658)

Table 7.8 Adjusting the gap

Action	Reference	Tools
Step 5 Insert feeler gauge to check the gap, till it is in 0.1~0.3mm.	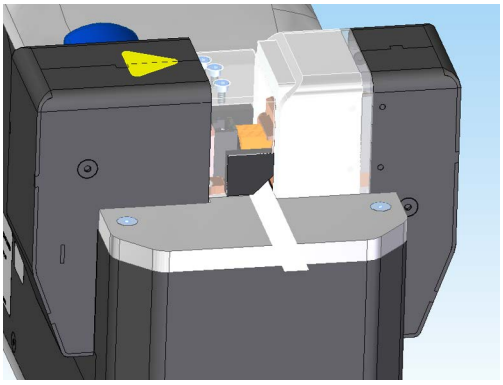	0.1mm feeler gauge 0.2mm feeler gauge 0.3mm feeler gauge (Not included in toolkit)
Step 6 Lock the M4 set screw, then recover actuator.	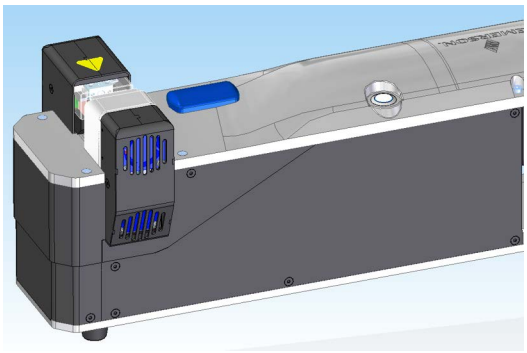	2mm hex wrench 2.5mm hex wrench (EDP: 211-658)

7.2.8 Screws and Tightening Torque

Figure 7.2 Screws and Tightening Torque

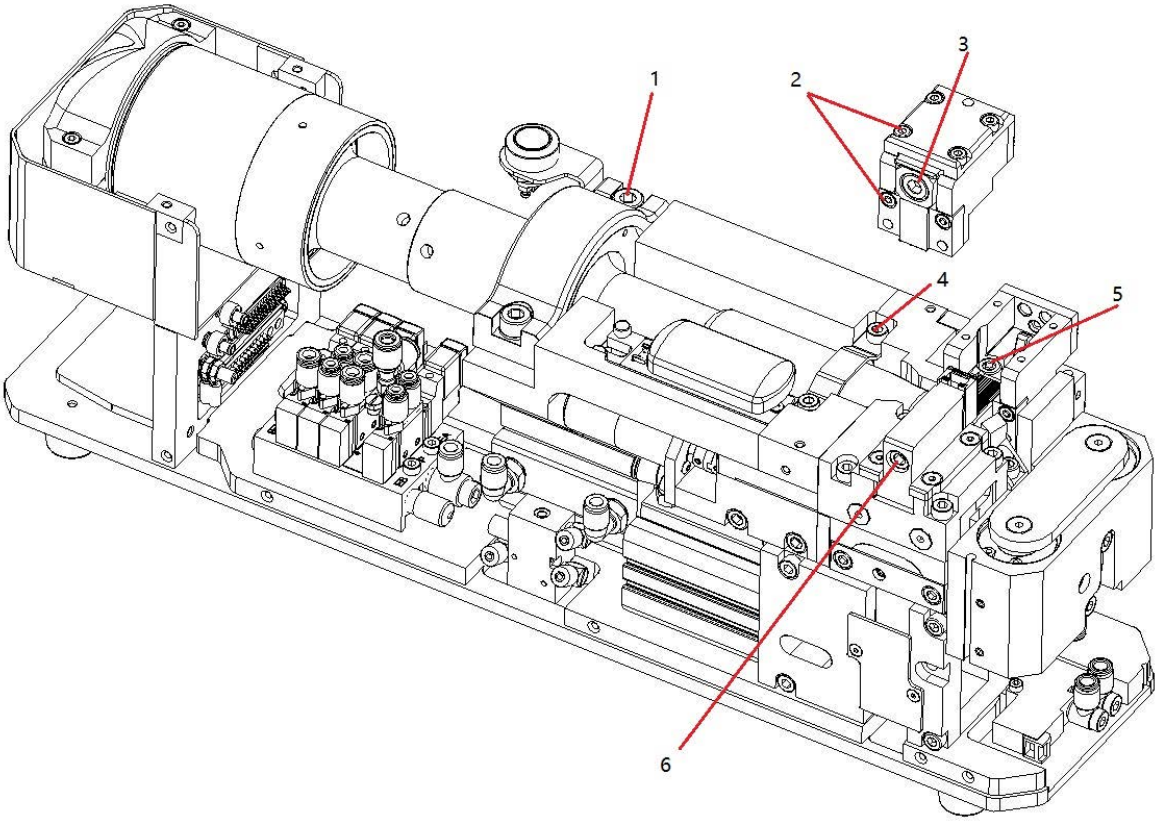

Table 7.9 Screws and Tightening Torque

Item	EDP	Description	Quantity	Torque (N.m)
1	100-298-350	SCR CAP M8x25 SOC STL-Z	2	25
2	1014500	M4X12, SOC CAP, 12.9	6	4
3	1014497 (1027148)	M8X16, SOC CAP, 12.9	1	40
4	1006111	M5X10, SOC CAP, 12.9	2	8
5	BU-1014498	M6X10, SOC CAP, 12.9	2	14
6	1014499	M6X30, SOC CAP, 12.9	1	10

7.3 Tools

An optional toolkit (EDP 1014626) and torque wrenches (EDP 1020468) are available for purchase. Please contact Branson for more information.

7.3.1 Toolkit

Table 7.10 Toolkit (EDP 1014626)

Item	EDP	Description	Quantity
1	101-118-039	Wrench Spanner 20 kHz 1.5"-2	1
2	211-636	Canvas Bag With Branson Logo	
3	211-658	Set, Allen, 1.5-5 mm, HEX	1
4	11008-09-001	Handle, Extension	1
5	48000-03-011	Spanner Wrench	1
6	1014851	Socket 1/4” Dr. Bits Hexagon 3 mm	1
7	1014852	Socket 1/4” Dr. Bits Hexagon 4 mm	1
8	1014853	Socket 1/4” Dr. Bits Hexagon 5 mm	1
9	BU-1014854	Socket 1/4” Dr. Bits Hexagon 6 mm	1
10	1016840	Feeler Gauge 0.01 mm 12.7x1000	1
11	1016841	Feeler Gauge 0.02 mm 12.7x1000	1
12	1016842	Feeler Gauge 0.03 mm 12.7x1000	1
13	1016843	Feeler Gauge 0.3 mm 13x300	1
14	1016844	Feeler Gauge 0.4 mm 13x300	1
15	1016845	Feeler Gauge 0.5 mm 13x300	1
16	1032104	Socket Dr. Bits Hexagon 8 mm 24205	1

7.3.2 Torque Wrenches

Table 7.11 Torque Wrenches (EDP 1020468)

Item	EDP	Description	Quantity
1	211-050	SK Torque Wrench 74150	1
2	1014850	Wrench Torque Stanley SD-030-22	1

7.3.3 Set Up Tools (Optional)*

Table 7.12 Set Up Tools (Optional)

Item	EDP	Description	Quantity
1	1006566	Tool Setup Horn Vertical	1
2	1010028	Tool Setup Horn Position	1

NOTICE
Optional tools. Order separately.

7.4 Troubleshooting

7.4.1 Fundamental Alarms

The system within the controller constantly monitors the system's fundamental working states for correct operation. When this system detects a fault condition, operation is interrupted and the system immediately goes to the alarm. A beeper will alter, meanwhile, the Status Display Window will give out a yellow light.

Figure 7.3 Status display under Fundamental Alarms

Use the following procedure to troubleshoot fundamental alarms:

- Check the E-Stop is in release status
- Verify that the 9-pin external E-Stop is properly connected to the back of main harness connector block
- Confirm the air supply pressure meets requirement. If alarm persists, confirm the air supply pressure from regulator meets requirements
- Check the 44 pin connector status at rear of Controller, as well as connection status between Main harness and Actuator
- Check the safety guard and its position sensor work properly. If alarm persists
- Power down and then power up the controller to reset the system

7.4.2 Functional Alarms

This section shows how to fix some of the possible errors and problems which may occur in normal use of the GMX-W1 welding system. When a functional alarm occur, a beeper will make a sound and the Status Display Window will give out red light, meanwhile, a message will rise out in screen, operator can find out the relevant measures in Table 7.13.

Figure 7.4 Status display under Functional Alarms

Table 7.13 Functional Alarms Troubleshooting

No.	Alarm Type	Description	Troubleshooting
1	Weld Time Alarm	Smaller than minimum time or larger than maximum time	• Check the nugget if there is quality defects such as over weld, overlap, little insert, strands loss, if yes, discard the welded wire and reset system to move on • Confirm tooling' s movement and gaps are normal • Adjust quality windows or enter Tech Mode interface re-build the quality windows
2	Weld Peak Power Alarm	Smaller than minimum power or larger than maximum power	
3	Weld Pre-height Alarm	Smaller than minimum pre-height or taller than maximum pre-height	
4	Weld Post Height Alarm	Smaller than minimum post height or taller than maximum post height	
5	Overload	Overload	• Excessive air pressure or amplitude, check welded parameters • The tooling gaps are too small, check the two gaps of horn • Check for loose installation of tooling, re-tighten if needed • Tooling may cracked, replace with new
6	Motor Error	Step motor error	• Check if the stopper has moved the limiting position • Check if the couple became loose
7	Height Encoder Error	Height encoder error	• Reset system and do a height calibration in maintenance interface • Check if the anvil downward motion is blocked • Check the height encoder and signal line

Table 7.13 Functional Alarms Troubleshooting

No.	Alarm Type	Description	Troubleshooting
8	Safety Cover Error	Safety guard error	• Check if the safety cover move obstructed • Confirm the position sensor and trigger part are fastened fully
9	24v Checking	24V lost	Check electrical connection in controller.
10	Cutter Error	Cutter switch error	Check cutter switch.
11	Actuator Board Error	Actuator board communication error	Check actuator board.
12	F-ram Error	F-ram read/write error	Check F-ram.
13	E-stop	E-Stop switch error	Check connected status of E-Stop switch.
14	Horn Count 80% Alarm	Horn count reached 80% limit setting	Check horn, maintain or replace, then reset the count.
15	Anvil Count 80% Alarm	Anvil count reached 80% limit setting	Check anvil tip, maintain or replace, then reset the count.
16	Guide Count 80% Alarm	Guide count reached 80% limit setting	Check anvil tip guide, maintain or replace, then reset the count.
17	Gather Count 80% Alarm	Gather count reached 80% alarm	Check gather tip, maintain or replace, then reset the count.
18	Horn Energy 80% Alarm	Horn energy reached 80% limit setting	Check horn, maintain or replace, then reset the energy.
19	Anvil Energy 80% Alarm	Anvil energy reached 80% limit setting	Check anvil tip, maintain or replace, then reset the energy.
20	Guide Energy 80% Alarm	Guide energy reached 80% limit setting	Check anvil tip guide, maintain or replace, then reset the energy.
21	Gather Energy 80% Alarm	Gather energy reached 80% alarm	Check gather tip, maintain or replace, then reset the energy.
22	Horn Count 100% Lock	Horn count reached 100% limit setting	Replace horn with new one, reset the count.
23	Anvil Count 100% Lock	Anvil count reached 100% limit setting	Replace anvil tip with new one, reset the count
24	Guide Count 100% Lock	Guide count reached 100% limit setting	Replace anvil tip guide with new one, reset the count
25	Gather Count 100% Lock	Gather count reached 100% limit setting	Replace gather tip with new one, reset the count
26	Horn Energy 100% Lock	Horn energy reached 100% limit setting	Replace horn with new one, reset the Energy

Table 7.13 Functional Alarms Troubleshooting

No.	Alarm Type	Description	Troubleshooting
27	Anvil Energy 100% Lock	Anvil energy reached 100% limit setting	Replace anvil tip with new one, reset the energy
28	Guide Energy 100% Lock	Guide energy reached 100% limit setting	Replace anvil tip guide with new one, reset the energy
29	Gather Energy 100% Lock	Gather energy reached 100% limit setting	Replace gather tip with new one, reset the energy

7.5 Parts List

This section provides the list of replacement parts. The following table lists items that are highly recommended to have readily available to prevent extended equipment down time and/or setup time.

Table 7.14 Spare Parts

Item	EDP	Description	Usage	Top Assembly	Critical[1]	Consumable[2]	Recommended[3]
1	1026519	Horn	1	Actuator	X		
2	1005757	Gather Tip	1	Actuator	X		
3	1005751	Anvil Tip	1	Actuator	X		
4	1005759	Anvil Tip Guide	1	Actuator	X		
5	1006947	Cutter Blade	1	Actuator	X		
6	1027984	Horn 3/8″	1	Actuator	X		
7	1026449	Gather Tip 3/8″	1	Actuator	X		
8	1026450	Anvil Tip 3/8″	1	Actuator	X		
9	1026448	Anvil Tip Guide 3/8″	1	Actuator	X		
10	1027877	Horn Fine 3/8″	1	Actuator	X		
11	BU-1027875	Gather Tip Fine 3/8″	1	Actuator	X		
12	1027876	Anvil Tip Fine 3/8″	1	Actuator	X		
13	1027874	Anvil Tip Guide Fine 3/8″	1	Actuator	X		
14	101-135-059R	Converter	1	Actuator	X		
15	BU-1026518	Horn Nodal Ring	1	Actuator	X		
16	1014606	Manifold	1	Actuator	X		
17	1012832	Anvil Cylinder Valve	1	Actuator	X		
18	1009979	Cutter Cylinder Valve	2	Actuator	X		
19	102-242-1273	Actuator Board	1	Actuator	X		
20	1005765	Width Motor & Encoder	1	Actuator	X		
21	BU-1042441	Safety Guard Window	1	Actuator			X
22	1007923	Tooling Cooling Fans	2	Actuator			X
23	1025196	Hand Start Switch Board	1	Actuator			X
24	1008391	Lighting LED Board	1	Actuator			X
25	1007924	RGB Lighting LED Board	1	Actuator			X
26	1008101	Reset Switch	1	Actuator			X
27	1015242	System Controller II	1	Controller	X		
28	102-242-1270R	Machine Controller Board	1	Controller	X		
29	200-132-294R	DC Power Module	1	Controller	X		

Table 7.14 Spare Parts

Item	EDP	Description	Usage	Top Assembly	Critical[1]	Consumable[2]	Recommended[3]
30	100-242-1230R	Line Filter	1	Controller	X		
31	159-244-069R	Output Module	1	Controller	X		
32	1035604	Single Board Computer[4]	1	Controller	X		
33	1009937	Gas Check Valve	2	Controller	X		
34	207-048	Air Regulator	1	Controller	X		
35	100-126-015R	Fan	2	Controller			X
36	200-029-1052	Ethernet Connector	1	Controller			X
37	100-241-422	USB Cables (Rear)	1	Controller			X
38	1010766	22'' Touch Screen	1	Others	X		
39	1007764	Emergency Stop Device	1	Others	X		
40	1007765	Foot Switch	1	Others		X	
41	BU-1036640	ASSY HEIGHT ENCODER L20 REF	1	Actuator			X

1. Critical parts are defined as parts without which the machine will not run
2. Consumable parts are ordered on a regular basis depending on the application
3. Recommended parts are other parts that are neither critical nor consumable
4. Contact Branson to get assertive software version for single board computer and/or programmed hard drive
5. After ECN-104201, single board computer changed from 1014399 to 1035604. Please contact Branson to get more information and assistance.

[This page intentionally left blank]

Appendix A: Electric Interconnect Diagram

A.1 Electric Interconnect Diagram 166

A.1 Electric Interconnect Diagram

Figure A.1 Electrical Interconnect Diagram - 01

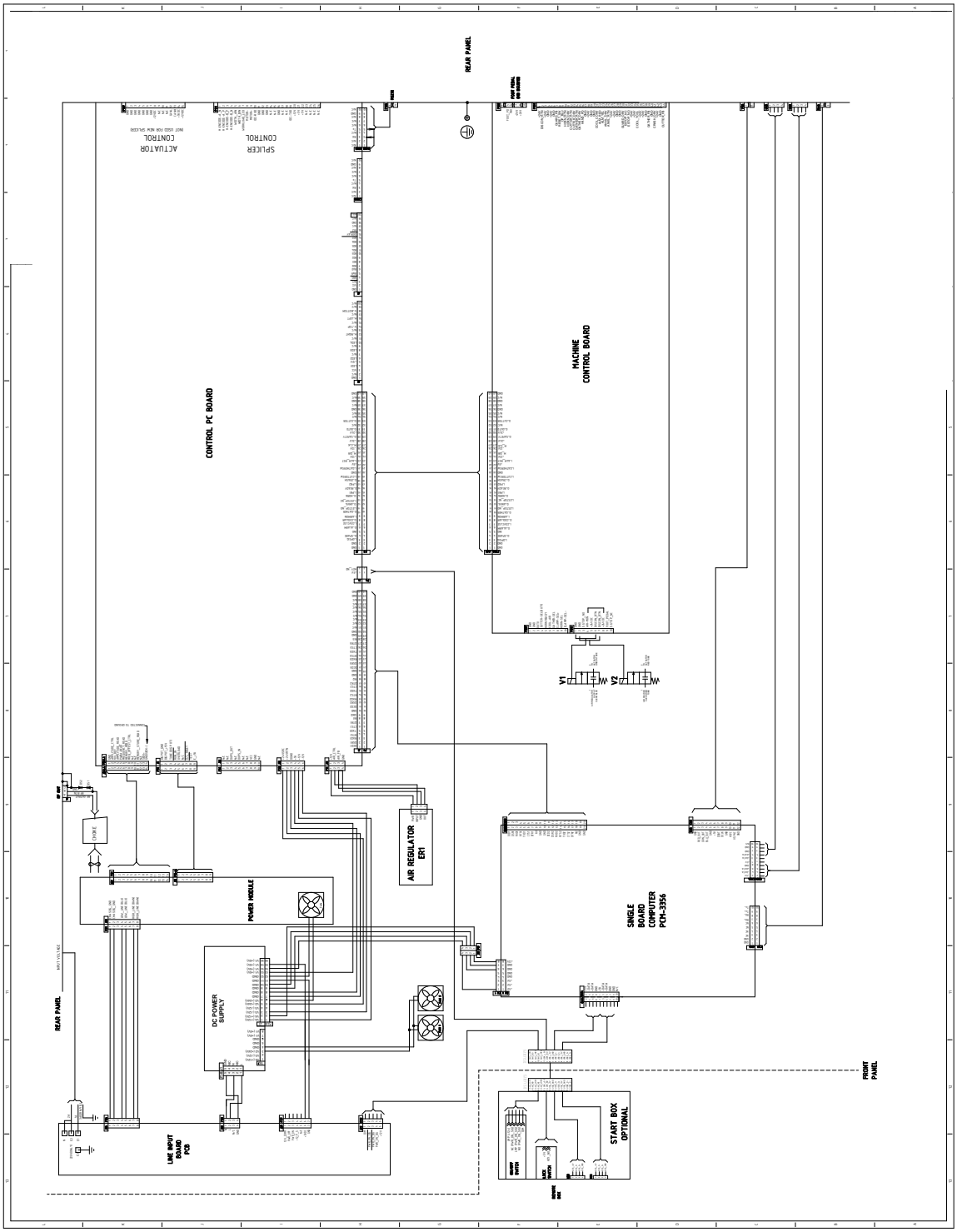

Figure A.2 Electrical Interconnect Diagram - 02

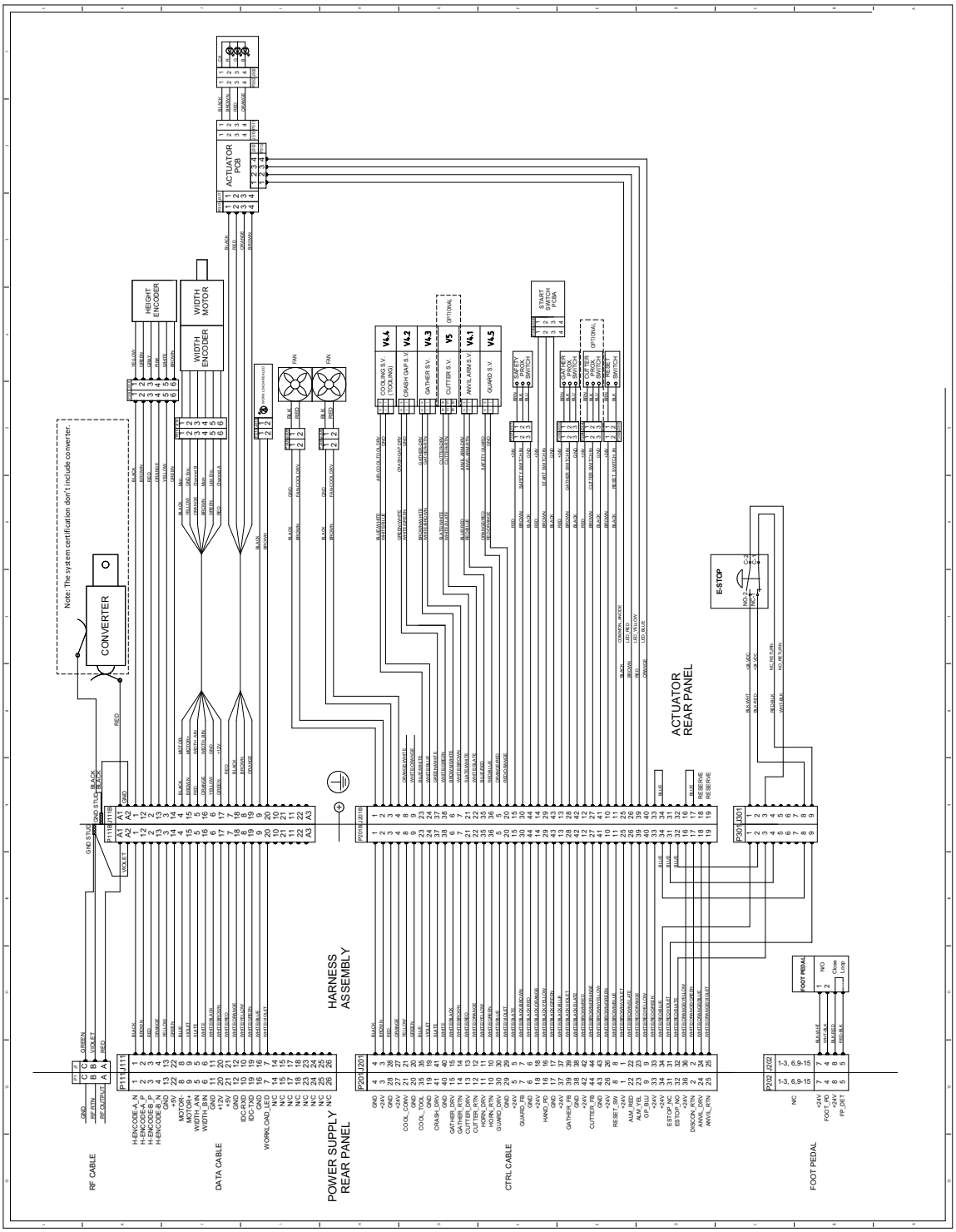

[This page intentionally left blank]

Appendix B: Pneumatic Interconnect Diagram

B.1 Pneumatic Interconnect Diagram. 170

B.1 Pneumatic Interconnect Diagram
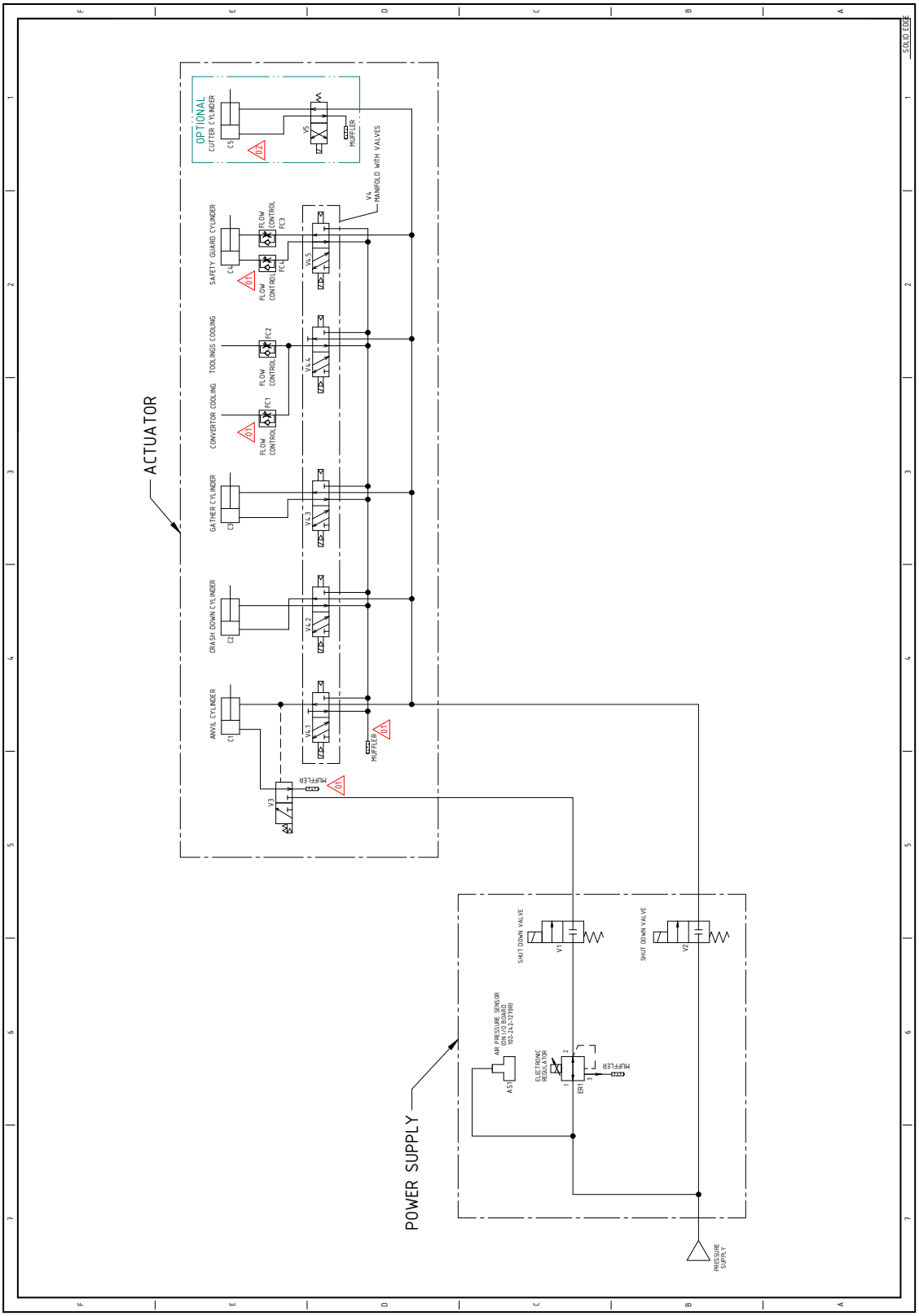
Figure B.1 Pneumatic Interconnect Diagram